TURCK

Your Global Automation Partner

IM(X)18-DI03-4S-5R Isolating Switching Amplifier

Safety Manual

Contents

1	**About this Document**	**5**
2	**Scope**	**5**
3	**Safety Integrity Level**	**5**
4	**Product Description**	**6**
4.1	Safety function	6
4.2	Safe state	6
4.3	PFH: Probability of dangerous failure per hour (High Demand mode)	7
4.4	PFD: Average probability of dangerous failure on demand (Low Demand mode)	8
5	**Safety-planning**	**8**
5.1	Architectural specifications	9
5.2	Assumptions	9
5.3	FMEDA results	9
5.4	Examples of using this results	10
5.4.1	Probability of dangerous failure per hour (High Demand Mode)	10
5.4.2	Average probability of dangerous failure on demand (Low Demand Mode)	10
6	**Operating Instructions**	**11**
6.1	General	11
6.2	Before operation	12
6.2.1	Parameterization	13
6.3	Operation	14
6.4	After operation	14
7	**Connection and Wiring Diagrams**	**15**
7.1	Output relay	15
7.1.1	Wiring diagrams	16
8	**Terms and Abbreviations**	**17**
9	**Appendix: Proof tests**	**17**
10	**Certificate**	**17**
11	**Document history**	**18**

1 About this Document

This safety manual contains all information that is required to operate the device in functional safety systems. Read this manual carefully before using the device.
This document addresses only functional safety according to IEC 61508. Other aspects, such as intrinsic safety, are not considered.
All instructions must be followed in order to assure functional safety.
Always make sure that this is the latest version of the safety manual at www.turck.com. The English version is considered the definitive document. Care was taken in the production of the translations of this document. If there is any uncertainty in its interpretation. Always refer to the English version of the safety manual or contact TURCK directly.

2 Scope

This safety manual is valid for the following devices.

ID	Productname	Number of Channels	Clamps	Power-Bridge	Intrinsic-Safety
100028612	IMX18-DI03-4S-5R-S/24VDC	4	screw	no	yes
100028614	IMX18-DI03-4S-5R-SPR/24VDC	4	screw	yes	yes
100028615	IMX18-DI03-4S-5R-S/24VDC/CC	4	spring type terminal	no	yes
100028616	IMX18-DI03-4S-5R-SPR/24VDC/CC	4	spring type terminal	yes	yes
100028617	IM18-DI03-4S-5R-S/24VDC	4	screw	no	no
100028618	IM18-DI03-4S-5R-SPR/24VDC	4	screw	yes	no
100028619	IM18-DI03-4S-5R-S/24VDC/CC	4	spring type terminal	no	no
100028620	IM18-DI03-4S-5R-SPR/24VDC/CC	4	spring type terminal	yes	no

The following chapters cover the devices
- IMX18-DI03-4S-5R-S
- IM18-DI03-4S-5R-S

3 Safety Integrity Level

The devices are rated to a SIL of:

SIL 2, SC3

4 Product Description

The isolating switching amplifiers are used for the galvanically isolated transmission of binary signals from sensors and mechanical contacts. Sensors acc. to EN 60947-5-6 (NAMUR) or mechanical contacts can be connected.

The output circuits are isolated from the input circuits and are designed as relay.

The input is specified according to EN 60947-5-6.

The device detects a short circuit when an input current of 6.2 mA is exceeded. The short-circuit condition will end when the input current falls below 5.9 mA.

A rotary switch assignes the inputs to the outputs

SIL2 - 1oo1 [Ex] → [Ax]

Depending on the input signal and according to the configuration (line monitoring, effective direction), the output assumes the safe state within 20 ms. This leads to the opening of the normally open contact.

A fuse must limit the current through relays to 2 A to prevent contact welding.

4.1 Safety function

According to the input signal and the configuration (linemonitoring, effective direction, mapping of inputs and outputs) the relay output is within 20 ms de-energized.

See „6.2.1 Parameterization“ on page 14 for input signals and configuration.

The products can be used with a hardware fault tolerance HFT = 0, e.g. in a 1oo1 architecture up to SIL 2 and with a hardware fault tolerance HFT = 1, e.g. in a 1oo2 architecture up to SIL 3, dependent of the application.

More than one channel must not be used for the same safety function, e.g. to increase the hardware failure tolerance to achieve a higher SIL, as they contain common components.

The Power-Bridge is not part of the safety-function.

The LED is not part of the safety-function.

The common alarm output is not part of the safety-function.

4.2 Safe state

The safe state is always the “low” state.

The “low” state depends on the output type:

Output type	Requirement state “low”
Relay	Relay is de-energized.

4.3 PFH: Probability of dangerous failure per hour (High Demand mode)

A **SIL2** is specified.
In the following table 3 from **7.6.2.9 EN 61508-1:2010** is a PFH of less than 10^{-6} h^{-1} required.
A failure limit of 1 FIT corresponds to a PFH of 10^{-9} h^{-1}.

Table 3 from 7.6.2.9 EN 61508-1

Safety Integrity Level (SIL)	Probablity of dangerous Failure per Hour from the safety function [h^{-1}] (PFH)
4	≥ 10^{-9} bis < 10^{-8}
3	≥ 10^{-8} bis < 10^{-7}
2	≥ 10^{-7} bis < 10^{-6}
1	≥ 10^{-6} bis < 10^{-5}

In the safety chain, the device is granted a share of 10 % of the respective failure limit value.

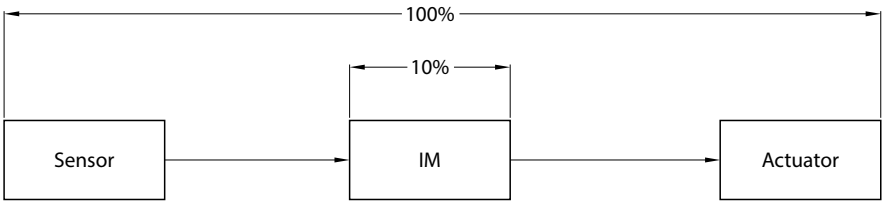

This means that the failure limit value must be less than or equal 100 FIT. (PFH <= 10^{-7} h^{-1})

4.4 PFD: Average probability of dangerous failure on demand (Low Demand mode)

A **SIL2** is specified.
In the following table 2 from **7.6.2.9 EN 61508-1:2010** is a PFD_{avg} of less than 10^{-2} h^{-1} required.

Table 2 from 7.6.2.9 EN 61508-1

Safety Integrity Level (SIL)	Average probability of a dangerous failure when the safety function is requested (PFD_{avg})
4	≥ 10^{-5} bis < 10^{-4}
3	≥ 10^{-4} bis < 10^{-3}
2	≥ 10^{-3} bis < 10^{-2}
1	≥ 10^{-2} bis < 10^{-1}

In the safety chain, the device is granted a share of 10 % of the respective failure limit value.

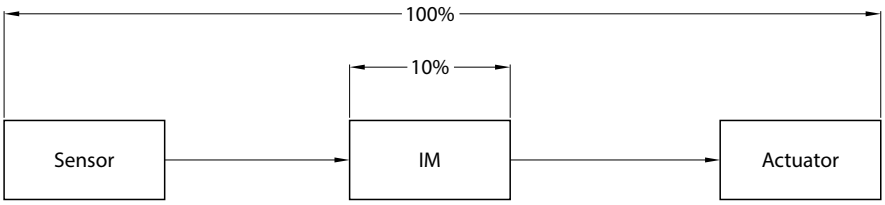

This means that the failure limit value must be less than 10^{-3} .
The basis of the consideration is a test interval of 8760 h and an MTTR or MRT of 24 h.

5 Safety-planning

Planning a safety-related loop
This chapter provides information for planning a safety-related loop.
The device is not specified for a certain application. Make sure that the data provided in this chapter is valid for your target application.
Special application-specific factors may cause the premature wear of the device and must be taken into consideration when planning systems; take special measures to compensate for a lack of experience based values, e.g. through implementation of shorter test intervals.
The suitability for specific applications must be assessed by considering the particular overall safety-related system with regard to the requirements of IEC 61508.
Safety-planning must only be carried out by trained and qualified personnel.
If there is any doubt contact TURCK directly.

5.1 Architectural specifications

Due to architectural considerations the following characteristics are specified:

Type	A
HFT	0

Useful lifetime:
Experience has shown that the useful lifetime often lies within a range of 8 to 12 years. It can be significantly less if elements are operated near their specification limits. However, it can be extended by appropriate measures. For example, heavy temperature fluctuations could potentially decrease the useful lifetime, as constant temperature below 40 °C could potentially increase the useful lifetime.
For the relay outputs (cos phi = 1, I = 2 A AC) the useful liftetime is 8 to 12 years or 50.000 switching cycles.

5.2 Assumptions

- Failure rates are constant for 10 years, wear out mechanisms are not included
- Propagation of failures are not relevant
- External power supply failure rates are not included
- All components that are not part of the safety function and cannot influence the safety function (feedback immune) are excluded.
- The activations of line-monitoring can improve the results

5.3 FMEDA results

A SIL2 is specified.

According to table 2 and table 3 from 7.4.4.2.2 EN 61508-1:2010, depending on the operating mode (Typ A or Typ B) and taking into account the hardware fault tolerance of HFT=0, the following SFF values are applied:

- For type A devices, the SFF must be greater than 60 %.
- For type B devices, the SFF must be greater than 90 %.

Table 2 from 7.4.4.2.2 EN 61508-2 (Typ A)

Part of safe Failures of an element	HFT=0	HFT=1	HFT=2
< 60 %	SIL 1	SIL 2	SIL 3
60 % … < 90 %	**SIL 2**	SIL 3	SIL 4
90 % … < 99 %	SIL 3	SIL 4	SIL 4
≥ 99 %	SIL 3	SIL 4	SIL 4

Table 3 from 7.4.4.2.2 EN 61508-2 (Typ B)

Part of safe Failures of an element	HFT=0	HFT=1	HFT=2
< 60 %	not allowed	SIL 1	SIL 2
60 % … < 90%	SIL 1	SIL 2	SIL 3
90 % … < 99%	**SIL 2**	SIL 3	SIL 4
≥ 99 %	SIL 3	SIL 4	SIL 4

The following safety characteristic are the results of the FMEDA.
According to the configuration (inversion-mode, line-monitoring) the results of the FMEDA vary. In this case the worst-case configuration is regarded

	λSD	λSU	λDD	λDU	No effect	SFF	DC
IMX18-DI03-4S-5R	0	271.30	6.9	92.09	366.51	75.1	6.97
IM18-DI03-4S-5R	0	271.30	6.9	92.09	366.51	75.1	6.97

The stated Safe Failure Fraction (SFF) is for reference only. The complete subsystem will need to be evaluated to determine the overall SFF.
The failure rates used in this analysis are the basic failure rates from the Siemens standard SN 29500 based on the average ambient temperature of components of 40 °C.
"No effect" is a failure mode of a component that plays part in implementing the safety function but is neither a safe nor a dangerous failure. According to IEC 62061, it would be possible to classify the "No effect" failures as "Safe Undetected" failures. Not doing so represents the worst-case.

5.4 Examples of using this results

5.4.1 Probability of dangerous failure per hour (High Demand Mode)

The PFH values are based on a worst-case diagnostic test rate and a reaction time of 20 ms. The ratio of the diagnostic test rate to the demand rate shall equal or exceed 100.

PFH	
IMX18-DI03-4S-5R	9.21E-08 1/h
IM18-DI03-4S-5R	9.21E-08 1/h

5.4.2 Average probability of dangerous failure on demand (Low Demand Mode)

With the FMEDA results and the values specified in the following table the average frequency of dangerous failure can be calculated exemplarily:

T1	8760h
MTTR	24h
MTR	24h
	PFDavg
IMX18-DI03-4S-5R	4.06E-04
IM18-DI03-4S-5R	4.06E-04

6 Operating Instructions

6.1 General

- The device must be registered online: **www.turck.com/SIL**
- The device must only be carried out, fitted, installed, operated, commissioned and maintained by trained and qualified personnel.
- The device is not specified for a certain application. Make sure that application-specific aspects are considered.
- Data from other documents, e.g. data sheets, is not valid for functional safety operation. Devices must be used in cabinets in an typical industrial field environment only. The following restrictions describe the operation and storage conditions:
- Ensure that the environment complies with the following ratings

Minimum ambient temperature	-25 °C
Maximum ambient temperature	70 °C
Minimum storage temperature	-40 °C
Maximum storage temperature	80 °C
Maximum air humidity	95 %
Minimum air pressure	80 kPa
Maximum air pressure	110 kPa

- The average temperature over a long period of time directly on the exterior sidewall of the housing must be maximum 40 °C.
- The temperature on the exterior sidewall of the housing can deviate considerably from the temperature in the control cabinet.
- The temperature on the exterior sidewall of the housing must be observed in a steady state.
- In case the temperature on the exterior sidewall of the housing is higher, the failure rates from **„5.3 FMEDA results“ on page 9** must be adjusted:
  For a higher average temperature of 60 °C on the exterior sidewall of the housing, the failure rates are multiplied by an experience factor of 2.5.
- Ensure that sufficient heat dissipation is provided.
- Protect the device from radiated heat and severe temperature fluctuations.
- Protect the device from dust, dirt, moisture, shock, vibration, chemical stress, increased radiation and other environmental influences.
- Ensure a degree of protection of at least IP20 according to IEC 60529 at the mounting location.
- Ensure that the electromagnetic stress does not exceed the requirements of IEC 61326-3.1.
- If there is a visible error, e.g. defective housing the device must not be used.
- During operation of the device, surface temperatures may occur that could lead to burns if touched.
- The device must not be repaired. If problems occur with regard to functional safety, TURCK must be notified immediately and the device must be returned immediately to:

  TURCK GmbH
  Witzlebenstraße 7
  45472 Mülheim
  Germany

A full assessment of the development process is carried out in accordance with EN 61508-1:2010, EN 61508-2:2010 and EN 61508-3:2010.

The Siemens standard SN 29500 for 40 °C is used as the database for determining the key safety figures (failure rates of the components, expected values).

The components used should be designed for a service life of 87600 h.

The safety-relevant use of the device is limited to control cabinets and switch boxes in typical industrial environments.

6.2 Before operation

▸ Fasten the device to a din rail according EN 60715 (TH35) as follows:

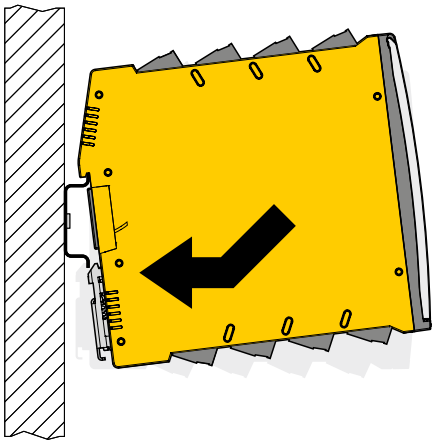

Fig. 1: Fasten the device

▸ Connect cables according to the wiring diagrams in „7 Connection and Wiring Diagrams“ on page 16
▸ Use cables with the following terminal cross section:
– rigid: 0.2 mm^2 to 2.5 mm^2 or
– flexible: 0.2 mm^2 to 2.5 mm^2
▸ When wiring with stranded wires: Fix the wiring ends with ferrules.

Connection via screw terminals:

- Insert the stripped cable ends (7 mm) in the guides of the cable glands.
- Fasten the screws with a screwdriver (max. tightening torque 0.5 Nm) to affix the cable ends.

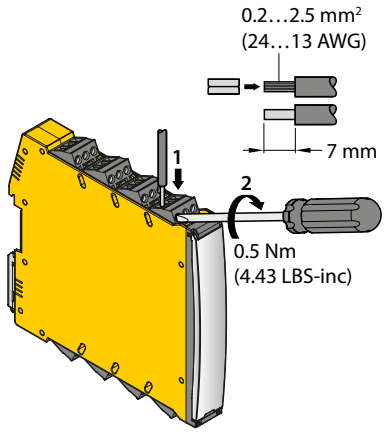

Fig. 2: Connection with screw terminals

Connection with spring-type terminals

- Push the opening lever with a suitable screwdriver.
- Insert the stripped cable ends (7 mm) in the guides of the spring-type terminals.
- Pull the screwdriver to fix the cable ends.

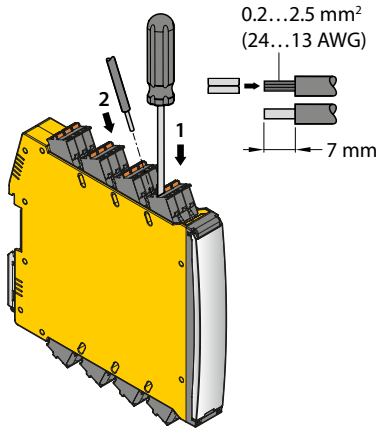

Fig. 3: Connection with spring-type terminals

- Make sure that only suitable equipment, e.g. sensors, are connected to the device (see „7 Connection and Wiring Diagrams“ on page 16).
- Make sure that a suitable power supply with the following characteristic is used:

Minimum voltage	10 VDC
Maximum voltage	30 VDC
Minimum power	4 W

6.2.1 Parameterization

The safety function depends on the parameterization via DIP- and rotary coded switches. The following switches are available:



Switch	Description
NC / NO	„Normally closed" (NC) or „Normally open" (NO) operation.
LM / off	Line monitoring for wire break and short curcuit activated (LM) or deactivated (off)
44	Input x assigned to output x
12/12	Input 1 assigned to output 1 and 2, input 3 assigned to output 3 and 4
11/13	Input 1 assigned to output 1, input 2 assigned to output 2, 3 and 4
14	Input 1 assigned to output 1, 2, 3 and 4

The following table describes the cases for the execution of the safety function.

The relay output is de-energized within 20 ms depending on the input signal and the parameterization:

Input signal (sensor state) according IEC 60947-5-6	LM / off	NC / NO
wire break	off	NO
	LM	NC or NO
short circuit	off	NC
	LM	NC or NO
open	LM or off	NO
closed	LM or off	NC

Normally closed, NC for short, stands for a contact or switch that opens when activated. Normally open, NO for short, stands for a contact or switch that closes when activated.

6.3 Operation

- If the device is used in low demand mode, proof tests shall be executed periodically according to T1.
- Ensure that the plug connections and cables are always in good condition.
- The device must be replaced immediately if the terminals are faulty or the device has any visible faults.
- If cleaning is required, do not use any liquid or statically charging cleaning agent. Perform proof tests after each cleaning.
- The proof test shall be executed each time after installation and parameterization in order to check the requested function.
- The LED State is not part of the safety function.
- The device must not parametrized during operation.
- The proof test (see „9 Appendix: Proof Tests“ on page 18) shall be executed each time after installation and parameterization in order to check the requested function.
- The DIP-and rotary- switches shall not be modified during operation.
- The device shall be locked against unintended operation/modification.

6.4 After operation

- Undo the terminal connection on the device.
- Remove the device from its rail fixing as shown in the figure:

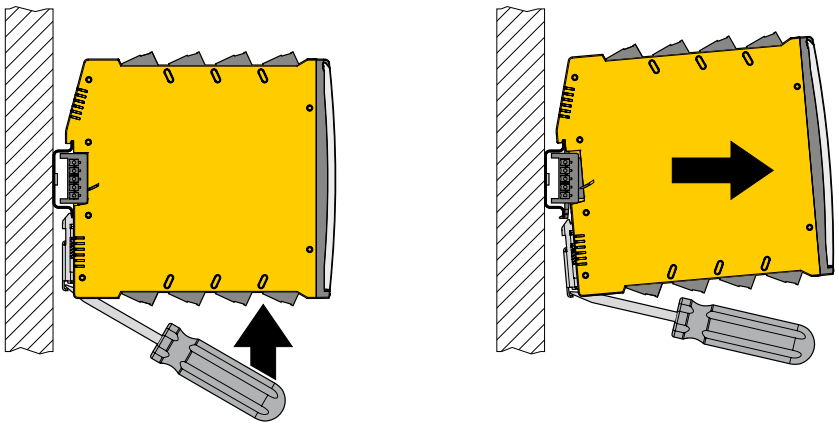

Fig. 4: Remove device

- Ensure the proper disposal of the device.

7 Connection and Wiring Diagrams

The pin number assignment can be found at the front label.

7.1 Output relay

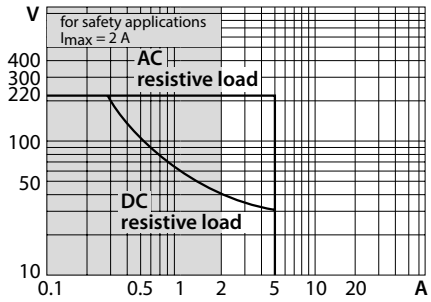

Fig. 5: Output relay load curve

7.1.1 Wiring diagrams

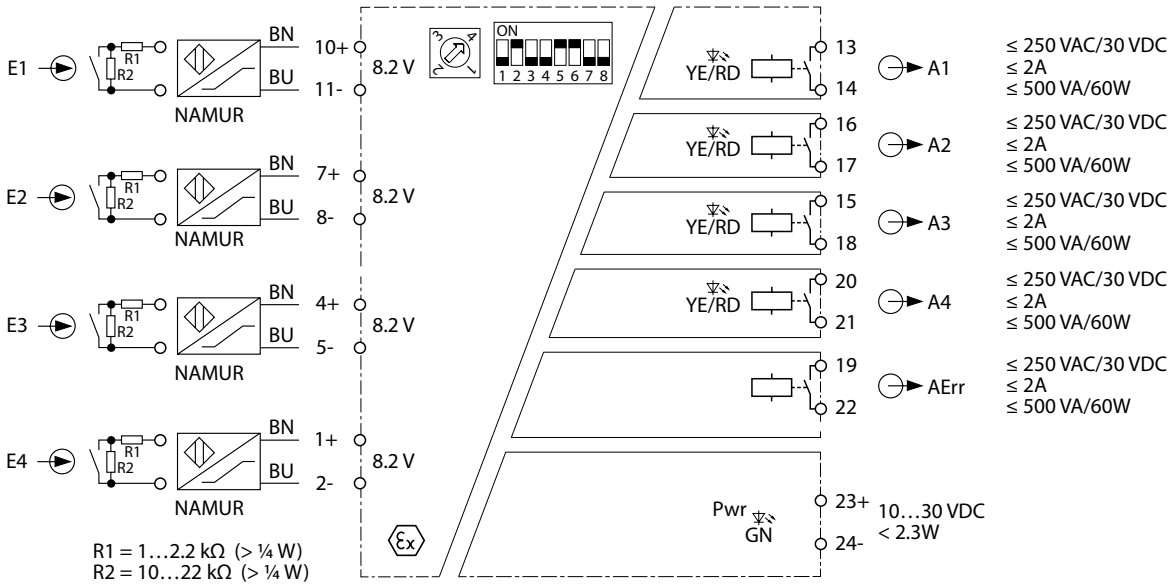

Fig. 6: Wiring diagram IMX18-DI03-4S-5R

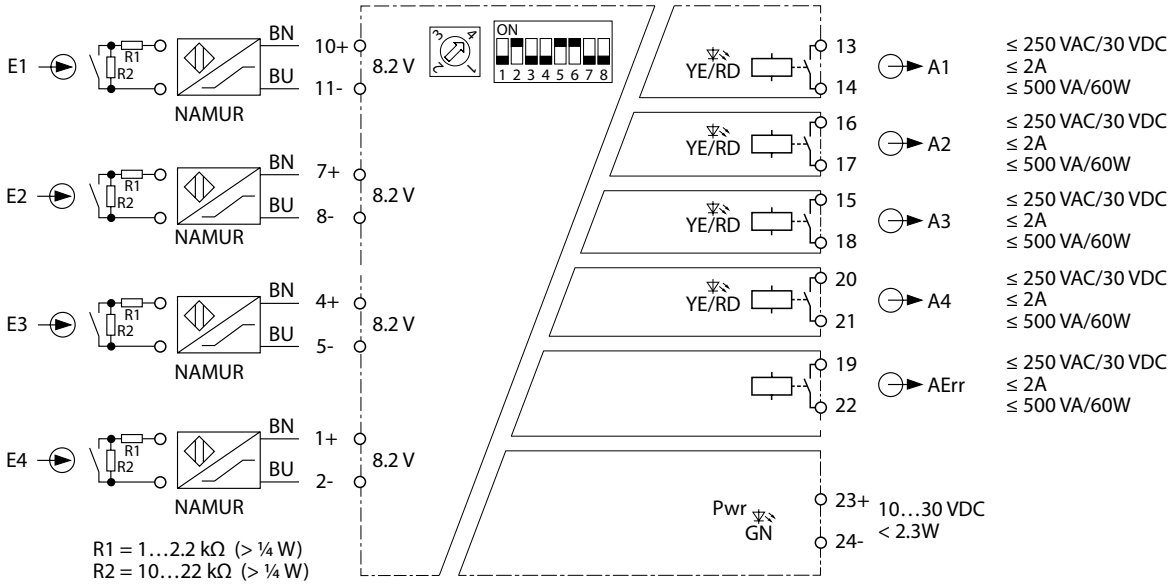

Fig. 7: Wiring diagram IM18-DI03-4S-5R

8 Terms and Abbreviations

DC	Diagnostic Coverage
FIT	1 FIT is 1 failure per 10E09 hours
FMEDA	Failure Modes, Effects and Diagnostic Analysis
HFT	Hardware failure tolerance
λ_{AU}	Undetected Annunciation failure rate (per hour) Annunciation failures do not directly impact safety but impact the ability to detect a future fault (such as a fault in diagnostic circuit).
λ_{DD}	Detected dangerous failure rate (per hour)
λ_{DU}	Undetected dangerous failure rate (per hour)
λ_{SD}	Detected safe failure rate (per hour)
λ_{SU}	Undetected safe failure rate (per hour)
MTTR	Mean time to restoration (hour)
PFD_{avg}	Average probability of dangerous failure on demand
PFH	Probability of dangerous failure per hour
SFF	Safe Failure Fraction
SIL	Safety Integrity Level
T1	Proof test interval (hour)
Type A	„Non-complex" element (all failure modes are well defined); for details see 7.4.4.1.2 of IEC 61508-2
Type B	„Complex" element (using micro controlllers or programmable logic); for details see 7.4.4.1.3 of IEC 61508-2

9 Appendix: Proof Tests

Proof tests shall be undertaken to reveal dangerous faults which are undected by diagnostic tests. This means that it is necessary to specify how dangerous undetected faults which have been noted during the FMEDA can be detected during proof testing.
Ensure that the proof test is only carried out by qualified personnel.
A suggested proof test consists of the following steps:

Step	Action
1.	Bypass the safety functions and take appropriate action to avoid a false trip.
2.	Provide appropriate input-/control signals to the interface modules and verify the expected signal input/output conditions for the interfaces.
3.	Verify if internal fault detection is working in case it is activated.
4.	Provide appropriate input-/control signals to the interface modules and verify that the safety function is carried out correctly.
5.	Remove the bypass and otherwise restore normal operation.

Once the test has been completed, document and archive the results.

The proof test coverage is 98.95 %.

10 Certificate

These products are certified by SGS-Saar for the use in safety-related applications. The certificate can be found under the following Link: www.turck.com

11 Document History

Document Version	Date	Modifications
1.0	2021-10-26	Initial version
2.0	2026-01-29	– SC3 added – Description added: capability of use in a 1oo2 architecture up to SIL 3 with a hardware fault tolerance HFT = 1, depending on the application – SIL card removed

TURCK

Your Global Automation Partner



Over 30 subsidiaries and
60 representations worldwide!

100034221 | 2026/01

www.turck.com