TURCK

Your Global Automation Partner

IM(X)12-TI02-1TCURTDR-1I Temperature Measuring Amplifier

Safety Manual

Contents

1	**About this document**	**5**
2	**Scope**	**5**
3	**Safety Integrity Level**	**6**
4	**Product description**	**6**
4.1	Safety function	6
4.2	Safety accuracy	6
4.3	Safe state	7
4.4	Alarm state	7
5	**Safety planning**	**8**
5.1	Architectural specificatons	8
5.2	Assumptions	8
5.3	FMEDA results	8
5.3.1	The following safety characteristic are the results of the FMEDA.	9
5.3.2	Probability of dangerous failure per hour (High Demand Mode)	9
5.3.3	Average probability of dangerous failure on demand (Low Demand Mode)	9
6	**Operating instructions**	**10**
6.1	General	10
6.2	Before operation	11
6.2.1	Parameterization	13
6.3	Operation	16
6.4	After operation	16
7	**Connection and wiring diagrams**	**17**
7.1	Output transistor	17
7.1.1	Wiring diagrams	17
8	**Terms and abbreviations**	**18**
9	**Appendix: failures**	**18**
9.1	Resistance	18
9.2	TC	19
9.3	RTD	19
10	**Proof tests**	**20**
11	**Certificate**	**21**
12	**Document history**	**21**

1 About this document

This safety manual contains all information that is required to operate the device in functional safety systems. Read this manual carefully before using the device.
This document addresses only functional safety according to IEC 61508. Other aspects, such as intrinsic safety, are not considered.
All instructions must be followed in order to assure functional safety.
Always make sure that this is the latest version of the safety manual at www.turck.com. The English version is considered the definitive document. Care was taken in the production of the translations of this document. If there is any uncertainty in its interpretation. Always refer to the English version of the safety manual or contact TURCK directly.

2 Scope

This safety manual is valid for the following devices.

ID	Product name	Number of Channels	Clamps	Power-Bridge	Intrinsic Safety
7580500	IMX12-TI02-1TCURTDR-1I-PR/24VDC	1	Screw	Yes	Yes
7580501	IMX12-TI02-1TCURTDR-1I-0/24VDC	1	Screw	No	Yes
7580502	IMX12-TI02-1TCURTDR-1I-PR/24VDC/CC	1	Spring type terminal	Yes	Yes
7580503	IMX12-TI02-1TCURTDR-1I-0/24VDC/CC	1	Spring type terminal	No	Yes
7580521	IM12-TI02-1TCURTDR-1I-PR/24VDC	1	Screw	Yes	No
7580522	IM12-TI02-1TCURTDR-1I-0/24VDC	1	Screw	No	No
7580523	IM12-TI02-1TCURTDR-1I-PR/24VDC/CC	1	Spring type terminal	Yes	No
7580524	IM12-TI02-1TCURTDR-1I-0/24VDC/CC	1	Spring type terminal	No	No

The following chapters cover the devices
- IMX12-TI02-1TCURTDR-1I
- IM12-TI02-1TCURTDR-1I

3 Safety Integrity Level

The devices are rated to a SIL of:

SIL 2

4 Product description

Universal temperature measuring amplifier

Input

- TC thermocouples according to IEC 60584, DIN 43710, GOST R 8.585-2001
- Low voltages (-150…+150 mV)
- RTDs according to IEC 60751, DIN 43760, GOST 6651-94 (2-, 3-, 4-wire)
- Resistors (0…5000 Ω)
- (2-, 3-, 4-wire) Cold junction compensation internal or external adjustable via DIP switch on the device

Output

- Current output source/sink 0/4…20 mA
- Collective fault signal output (MOSFET), potential-free

4.1 Safety function

The measured values at input [E_1] are transmitted to the output [A_1A] according to the parameterization within 10 s (local process safety time) observing the permissible safety accuracy.

The safety function is executed 5 s after power-on.

The LED State is not part of the safety function.

The common alarm output is not part of the safety function.

The power-bridge is not part of the safety function.

4.2 Safety accuracy

The safety accuracy Δtotal depends on the variant and its configuration.
In order to evaluate the safety accuracy for an inidividual configuration the following information is required:

Accuracy	Value
Δ_{TC}	See chapter "9.2 TC" on page 19
Δ_{RTD}	See chapter "9.3 RTD" on page 19
Δ_{Ohm}	See chapter "9.1 Resistance" on page 18

$\Delta_{[A1A]}$ = 100 µA/(16 mA/(|"measuring range start"- "measuring range end"|))

Assignment [E] to [A]	Δ_{total}
[E_1]→ [A_x]	$\Delta_{[E1]} + \Delta_{[A1A]}$

$\Delta_{[E1]}$ depends on the parameter "Measuring mode" and "CJC Mode" if applicable:

Measuring mode	CJC mode	$\Delta_{[E1]}$	Unit
TC	Internal	$\Delta_{TC} + 2$	°C
TC	External	$\Delta_{TC} + \Delta_{RTD}$	°C
RTD	-	Δ_{RTD}	°C
Low voltage	-	0.175	mV
Resistor	-	Δ_{Ohm}	Ω

4.3 Safe state

The safe state is defined as the output reaching the user defined threshold value.

If the unit changes to the safe state due to an internal error, it must be replaced within 24 h.

Due to errors in the unit, the measurement error can increase up to the error tolerance. If the error exceeds the error tolerance, the outputs of the unit go into the safe state.

4.4 Alarm state

Internal diagnostics are provided in order to detect random hardware failures that result in a failure of the function. If a failure is detected the device goes into the alarm state. The time between the occurance of the failure and the time to achieve the alarm state is less than 10 s. The device remains in alarm state as long as the failure persists, at least for 2 s.

The alarm state is defined as the output is less than 3.6 mA or greater than 21 mA.

According to table 2 and table 3 from 7.4.4.2.2 EN 61508-1:2010, depending on the operating mode (Typ A or Typ B) and taking into account the hardware fault tolerance of HFT=0, the following SFF values are applied:
- For type A devices, the SFF must be greater than 60 %.
- For type B devices, the SFF must be greater than 90 %.

Table 2 from 7.4.4.2.2 EN 61508-2 (Typ A)

Part of safe Failures of an element	HFT=0	HFT=1	HFT=2
< 60 %	SIL 1	SIL 2	SIL 3
60 % - < 90%	**SIL 2**	SIL 3	SIL 4
90 % - < 99%	SIL 3	SIL 4	SIL 4
≥ 99 %	SIL 3	SIL 4	SIL 4

Table 3 from 7.4.4.2.2 EN 61508-2 (Typ B)

Part of safe Failures of an element	HFT=0	HFT=1	HFT=2
< 60 %	not allowed	SIL 1	SIL 2
60 % - < 90%	SIL 1	SIL 2	SIL 3
90 % - < 99%	**SIL 2**	SIL 3	SIL 4
≥ 99 %	SIL 3	SIL 4	SIL 4

5 Safety planning

This chapter provides information for planning a safety-related loop.
The device is not specified for a certain application. Make sure that the data provided in this chapter is valid for your target application.
Special application-specific factors may cause the premature wear of the device and must be taken into consideration when planning systems; take special measures to compensate for a lack of experience based values, e.g. through implementation of shorter test intervals.
The suitability for specific applications must be assessed by considering the particular overall safety-related system with regard to the requirements of IEC 61508.
Safety-planning must only be carried out by trained and qualified personnel.
If there is any doubt contact TURCK directly.

5.1 Architectural specificaton

Type	B
HFT	0

Experience has shown that the useful lifetime often lies within a range of 8 to 12 years. It can be significantly less if elements are operated near their specification limits. However, it can be extended by appropriate measures. For example, heavy temperature fluctuations could potentially decrease the useful lifetime, as constant temperature below 40 °C could potentially increase the useful lifetime.
Two devices must not be used for the same safety-function to increase the hardware fault tolerance to achieve a higher SIL. A 1oo2 architecture does not achieve a SIL3.

5.2 Assumptions

- Failure rates are constant for 10 years, wear out mechanisms are not included.
- Propagation of failures are not relevant.
- External power supply failure rates are not included.
- All components that are not part of the safety function and cannot influence the safety function (feedback immune) are excluded.
- The activations of line-monitoring can improve the results.

5.3 FMEDA results

According to table 2 and table 3 from 7.4.4.2.2 EN 61508-1:2010, depending on the operating mode (Typ A or Typ B) and taking into account the hardware fault tolerance of HFT=0, the following SFF values are applied:

- For type A devices, the SFF must be greater than 60 %.
- For type B devices, the SFF must be greater than 90 %.

Table 2 from 7.4.4.2.2 EN 61508-2 (Typ A)

Part of safe failures of an element	HFT=0	HFT=1	HFT=2
< 60 %	SIL 1	SIL 2	SIL 3
60 % … < 90 %	**SIL 2**	SIL 3	SIL 4
90 % … < 99 %	SIL 3	SIL 4	SIL 4
≥ 99 %	SIL 3	SIL 4	SIL 4

Table 3 from 7.4.4.2.2 EN 61508-2 (Typ B)

Part of safe failures of an element	HFT=0	HFT=1	HFT=2
< 60 %	not allowed	SIL 1	SIL 2
60 % … < 90 %	SIL 1	SIL 2	SIL 3
90 % … < 99 %	**SIL 2**	SIL 3	SIL 4
≥ 99 %	SIL 3	SIL 4	SIL 4

5.3.1 The following safety characteristic are the results of the FMEDA.

According to the configuration (inversion-mode, line-monitoring) the results of the FMEDA vary. In this case the worst-case configuration is regarded.

	λ_{SD}	λ_{SU}	λ_{DD}	λ_{DU}	No effect	SFF	DC
IMX12-TI02-1TCURTDR-1I **IM12-TI02-1TCURTDR-1I**	0 FIT	154.74 FIT	316.78 FIT	44.47 FIT	490 FIT	91.38 %	97.27 %

For analog outputs a λ_{DD} failure is defined as a failure that is dangerous but is detected by internal diagnostics and causes the output the output signal to go to the maximum output current (> 21 mA) or minimum output current (< 3.6 mA).

The stated Safe Failure Fraction (SFF) is for reference only. The complete subsystem will need to be evaluated to determine the overall SFF.
The failure rates used in this analysis are the basic failure rates from the Siemens standard SN 29500 based on the average ambient temperature of components of 40 °C.
„No effect" is a failure mode of a component that plays part in implementing the safety function but is neither a safe nor a dangerous failure. According to IEC 62061, it would be possible to classify the „No effect" failures as „Safe Undetected" failures. Not doing so represents the worst-case.

5.3.2 Probability of dangerous failure per hour (High Demand Mode)

The sum of the diagnostic test interval and the time to achieve the specified safe/alarm state is less than 10 s. The ratio of the diagnostic test rate to the demand rate shall equal or exeed 100.

PFH	
IMX12-TI02-1TCURTDR-1I IM12-TI02-1TCURTDR-1I	44,47E-09 1/h

5.3.3 Average probability of dangerous failure on demand (Low Demand Mode)

With the FMEDA results and the values specified in the following table the average frequency of dangerous failure can be calculated exemplarily:

T1	8760 h
MTTR	24 h
	PFDavg
IMX12-TI02-1TCURTDR-1I **IM12-TI02-1TCURTDR-1I**	2.03E-04

6 Operating instructions

6.1 General

- The device must be registered online: **http://www.turck.com/SIL**
- The device must only be carried out, fitted, installed, operated, commissioned and maintained by trained and qualified personnel.
- The device is not specified for a certain application. Make sure that application-specific aspects are considered.
- Data from other documents, e.g. data sheets, is not valid for functional safety operation. Devices must be used in cabinets in an typical industrial field environment only. The following restrictions describe the operation and storage conditions:
  - Ensure that the environment complies with the following ratings

Minimum ambient temperature	-25 °C
Maximum ambient temperature	70 °C
Minimum storage temperature	-40 °C
Maximum storage temperature	80 °C
Maximum air humidity	95 %
Minimum air pressure	80 kPa
Maximum air pressure	110 kPa

  - The average temperature over a long period of time directly on the exterior sidewall of the housing must be maximum 40 °C.
  - The temperature on the exterior sidewall of the housing can deviate considerably from the temperature in the control cabinet.
  - The temperature on the exterior sidewall of the housing must be observed in a steady state.
  - In case the temperature on the exterior sidewall of the housing is higher, the failure rates from **"5.3 FMEDA results" on page 8** must be adjusted:
  - For a higher average temperature of 60 °C on the exterior sidewall of the housing, the failure rates are multiplied by an experience factor of 2.5.
- Ensure that sufficient heat dissipation is provided.
- Protect the device from radiated heat and severe temperature fluctuations.
- Protect the device from dust, dirt, moisture, shock, vibration, chemical stress, increased radiation and other environmental influences.
- Ensure a degree of protection of at least IP20 according to IEC 60529 at the mounting location.
- Ensure that the electromagnetic stress does not exceed the requirements of IEC 61326-3.1.
- If there is a visible error, e.g. defective housing, the device must not be used.
- During operation of the device, surface temperatures may occur that could lead to burns if touched.
- The device must not be repaired. If problems occur with regard to functional safety, TURCK must be notified immediately and the device must be returned immediately to:

  TURCK GmbH
  Witzlebenstraße 7
  45472 Mülheim
  Germany

6.2 Before operation

▸ Fasten the device to a din rail according EN 60715 (TH35) as follows:

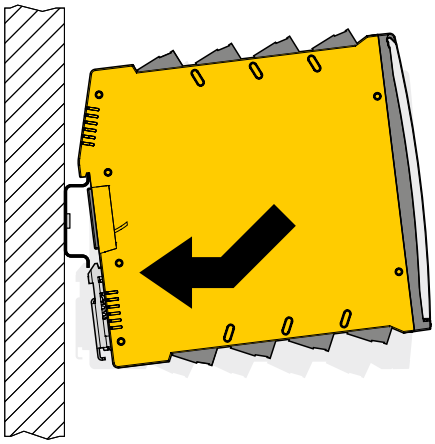

Fig. 1: Fasten the device

▸ Connect cables according to the wiring diagrams in “7 Connection and wiring diagrams“ on page 17
▸ Use cables with the following terminal cross section
  – rigid: 0.2 mm² to 2.5 mm² or
  – flexible: 0.2 mm² to 2.5 mm²
▸ When wiring with stranded wires: Fix the wiring ends with ferrules.

Connection via screw terminals:

▸ Insert the stripped cable ends (7 mm) in the guides of the cable glands.
▸ Fasten the screws with a screwdriver (max. tightening torque 0.5 Nm) to affix the cable ends.

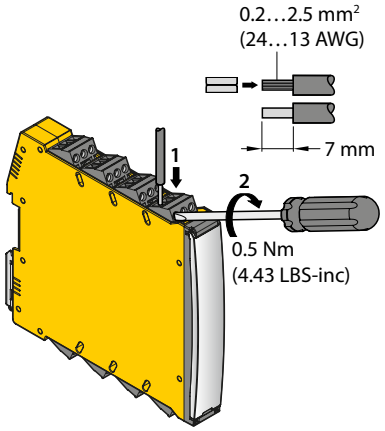

Fig. 2: Connection with screw terminals

Connection with spring-type terminals

- Push the opening lever with a suitable screwdriver.
- Insert the stripped cable ends (7 mm) in the guides of the spring-type terminals.
- Pull the screwdriver to fix the cable ends.

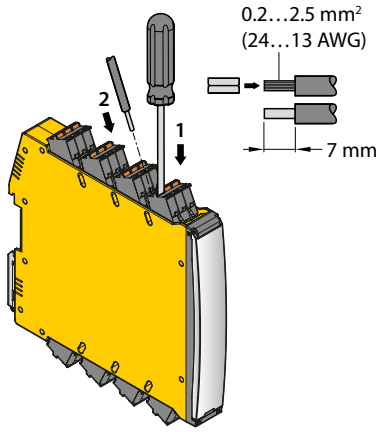

Fig. 3: Connection with spring-type terminals

- Make sure that only suitable equipment, e.g. sensors, are connected to the device (see "7 Connection and wiring diagrams" on page 17).
- Make sure that a suitable power supply with the following characteristic is used:

Minimum voltage	10 VDC
Maximum voltage	30 VDC
Minimum power	4 W

6.2.1 Parameterization

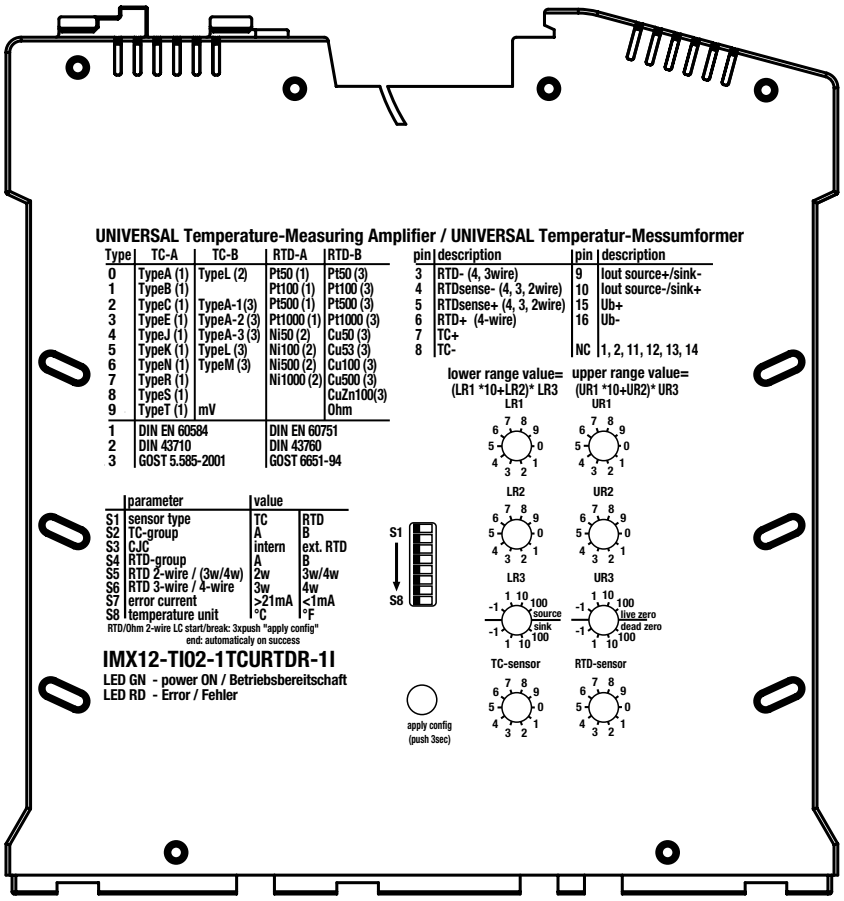

The device is configured via rotary coding switches and DIP switches.

Set basic parameters via DIP switches

DIP switch	Parameter	Left	Right
S1	Sensor type	TC	RTD
S2	TC group	A	B
S3	CJC	Intern	Ext. RTD
S4	RTD-group	A	B
S5	RTD 2wire/(3w/4w)	2w	3w/4w
S6	RTD 3wire/4wire	3w	4w
S7	Error current	> 21 mA	< 1 mA
S8	Temperature unit	°C	°F

S7 error current: output current by wire break in the input ciruit.

Set measurement mode RTD/Ohm/TC/mV

▸ Set TC type or mV (extra-low voltage) via rotary coding switch "TC-sensor" resp. set RTD type or Ohm (resistance) via rotary coding switch "RTD-sensor".

TC-sensor/ RTD-sensor	TC-Group A	TC-Group B	RTD-Group A	RTD-Group B
0	Typ A (4)	Typ I (5)	PT50 (1)	PT50 (3)
1	Typ B (4)		PT100 (1)	PT100 (3)
2	Typ C (4)	Typ A-1 (6)	PT500 (1)	PT500 (3)
3	Typ E (4)	Typ A-2 (6)	PT1000 (1)	PT1000 (3)
4	Typ J (4)	Typ A-3 (6)	Ni50 (2)	Cu50 (3)
5	Typ K (4)	Typ L (6)	Ni100 (2)	Cu53 (3)
6	Typ N (4)	Typ M (6)	Ni500 (2)	Cu100 (3)
7	Typ R (4)		Ni1000 (2)	Cu500 (3)
8	Typ S (4)			CuZn100 (3)
9	Typ T (4)	mV		Ohm

Nr.	Norm
(1)	DIN EN 60751, GOST 6651-94 -09 (Pt: W100 = 1.385)
(2)	DIN 43760
(3)	GOST 6651-94 -09 (Pt: W100 = 1.391)
(4)	DIN EN 60584
(5)	DIN 43710
(6)	GOST 5.585-2001

Set start and end value for analog measuring range

The start value is used to set the analog output current of 0/4 mA within the measuring range limits of the connected sensor, at which input value an analog output current of 0/4 mA is output.
The end value is used to set the input value at which an analog output current of 20 mA is output.
The selected measuring span must be equal to or greater than the minimum measuring span of the connected sensor.

Rotary switch	Value	Description
LR1	0…9	Initial value Measuring range, tens digit
LR2	0…9	Initial value Measuring range, units digit
LR3	Source: -1,1,10,100 Sink: -1,1,10,100	Initial value measuring range, factor, Operating mode selection (source/sink)
UR1	0…9	End value measuring range, tens digit
UR2	0…9	Start value Measuring range, units digit
UR3	Source: -1,1,10,100 Sink: -1,1,10,100	End value measuring range, factor, Current signal selection (0…20 mA/4…20 mA)

▸ Use the rotary coding switches LR1, LR2 and LR3 to set the initial value for the analog measuring range and the operating mode (source/sink):

Initial value for analog measuring range: (LR1 × 10 + LR2) × LR3

▸ Use the rotary coding switches UR1, UR3 and UR4 to set the end value for the analog measuring range and the current signal (0…20 mA/4…20 mA):

Final value for analog measuring range: (UR1 × 10 + UR2) × UR3

The following numbers can be set:
-99 (-98)…0 | 1 …99 | 100 (110)…990 |1000 (1100)…9900
The physical unit results from the selected measuring mode (RTD/Ohm/TC/mV)

Save new configuration

▸ Press key T1 (apply config) and keep it pressed for min. 2 sec. and max. 6 sec. Otherwise the configuration of the instrument switches back in its original state.

The instrument should indicate successful or refused acceptance of the configuration in each case by an LED signal.

2 wire balancing automatic

The measuring point must be short-circuited in order to carry out the line balancing.
To start the initialization of the automatic line balancing in 2-wire mode, pushbutton T1 must be pressed three times within two seconds.
A flashing code of the LED indicates that the adjustment has been started. Red and green LED flash in opposite phase.
During an active automatic line balancing, signaling takes place:
If a constant resistance of < 50 Ω is detected for longer than 5 s, the device stores this value Rltg permanently. The adjustment is completed.
After completion of the adjustment, which is indicated by a LED blink code, the short circuit must be cancelled.
If the active line balancing is to be canceled, pushbutton T1 (apply config) must be pressed again three times within two seconds.

It is not permissible to configure the unit while it is operating in a safety application.

The current output in a safety application must not be operated in 0…20 mA (zero point) mode.

The device shall be locked against unintended operation/modification.

6.3 Operation

- If the device is used in low demand mode, proof tests shall be executed periodically according to T1.
- Ensure that the plug connections and cables are always in good condition.
- The device must be replaced immediately if the terminals are faulty or the device has any visible faults.
- If cleaning is required, do not use any liquid or statically charging cleaning agent. Perform proof tests after each cleaning.
- The proof test (see "10 Proof tests" on page 20) shall be executed each time after installation and parameterization in order to check the requested function.
- For CJC of thermocouples (TCs), the user must ensure that for "CJC internal" the open end (cold junction) of the thermocouple is led to the terminal of the unit and for "CJC external" the resistance thermometer (RTD) to be connected must be led to the cold junction of the TC. From here, the TC must be connected to the unit via copper wires.
- RTD/resistor connection type: 2-wire connection: The user must ensure that the configured line resistance matches the actual line resistance.
- RTD/resistor connection type: 3-wire connection: The user must ensure that the live outgoing line has the same ohmic resistance as the live return line (balanced line).
- The nominal voltage of the power supply of the device is 24 VDC. It must be operated with a range of 10…30 VDC.
- No changes must be made to the parameterization during operation.

6.4 After operation

- Undo the terminal connection on the device.
- Remove the device from its rail fixing as shown in the figure:

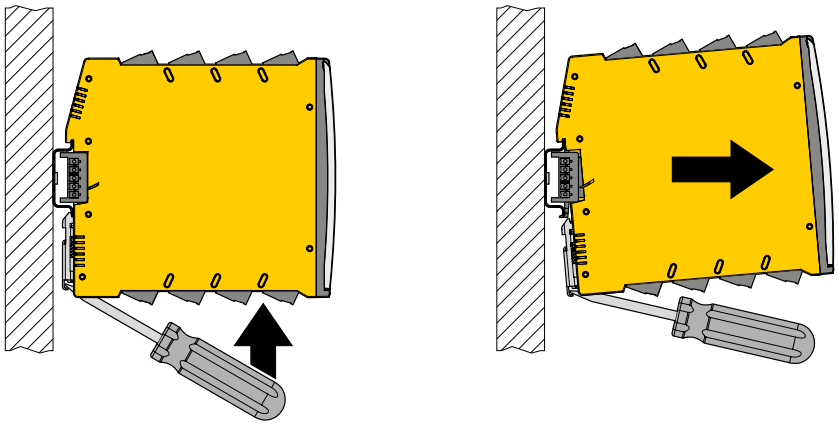

Fig. 4: Remove device

- Ensure the proper disposal of the device.

7 Connection and wiring diagrams

The pin number assignment can be found at the front label.

7.1 Output transistor

7.1.1 Wiring diagrams

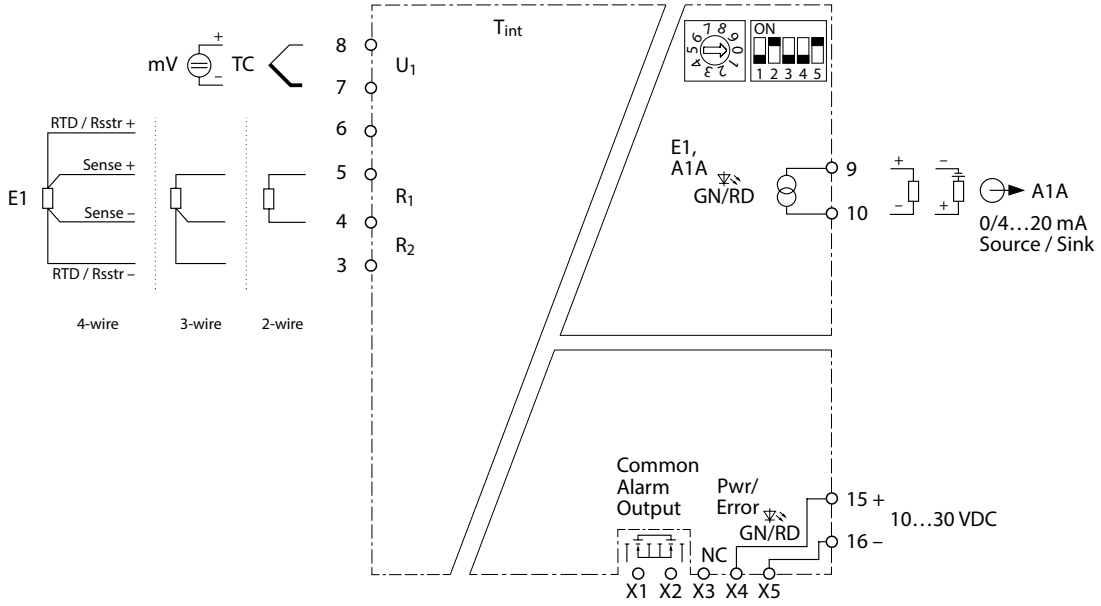

Fig. 5: Wiring diagram IM12-TI02-1TCURTDR-1I

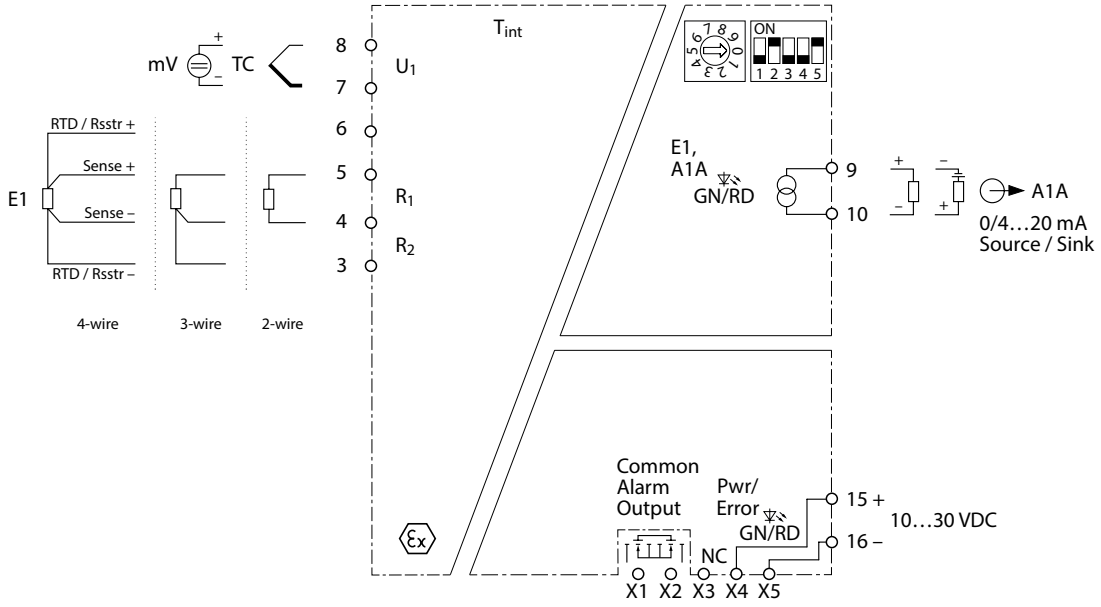

Fig. 6: Wiring diagram IMX12-TI02-1TCURTDR-1I

8 Terms and abbreviations

DC	Diagnostic Coverage
FIT	1 FIT is 1 failure per 10E09 hours
FMEDA	Failure Modes, Effects and Diagnostic Analysis
HFT	Hardware failure tolerance
λ_{AU}	Undetected Annunciation failure rate (per hour) Annunciation failures do not directly impact safety but impact the ability to detect a future fault (such as a fault in diagnostic circuit).
λ_{DD}	Detected dangerous failure rate (per hour)
λ_{DU}	Undetected dangerous failure rate (per hour)
λ_{SD}	Detected safe failure rate (per hour)
λ_{SU}	Undetected safe failure rate (per hour)
MTTR	Mean time to restoration (hour)
PFD_{avg}	Average probability of dangerous failure on demand
PFH	Probability of dangerous failure per hour
SFF	Safe Failure Fraction
SIL	Safety Integrity Level
T1	Proof test interval (hour)
Type A	„Non-complex" element (all failure modes are well defined); for details see 7.4.4.1.2 of IEC 61508-2
Type B	„Complex" element (using micro controlllers or programmable logic); for details see 7.4.4.1.3 of IEC 61508-2

9 Appendix: failures

9.1 Resistance

	Δ_{Ohm}
Low Range 0…500 Ω	0.2 Ω
High Range 500…5000 Ω	2 Ω

When selecting "R_{Sensor} connection mode: 3-wire" the values for Δ_{Ohm} are doubled.

9.2 TC

TC Type	Δ_{TC}
DIN EN 60584 Typ A	15 K
DIN EN 60584 Typ B	199 K
DIN EN 60584 Typ C	13 K
DIN EN 60584 Typ E	15 K
DIN EN 60584 Typ J	9 K
DIN EN 60584 Typ K	24 K
DIN EN 60584 Typ N	34 K
DIN EN 60584 Typ R	41 K
DIN EN 60584 Typ S	39 K
DIN EN 60584 Typ T	21 K
DIN 43710 Typ L	6 K
GOST 8.585-2001 Typ A-1	15 K
GOST 8.585-2001 Typ A-2	15 K
GOST 8.585-2001 Typ A-3	15 K
GOST 8.585-2001 Typ L	7 K
GOST 8.585-2001 Typ M	10 K

9.3 RTD

RTD-Type	Δ_{RTD}
DIN EN 60751 Platinum Pt50	1.4 K
DIN EN 60751 Platinum Pt500	
DIN EN 60751 Platinum Pt100	0.8 K
DIN EN 60751 Platinum Pt1000	
DIN 43760 Nickel Ni50	0.9 K
DIN 43760 Nickel Ni500	
DIN 43760 Nickel Ni100	0.5 K
DIN 43760 Nickel Ni1000	
GOST 6651-94 Platinum Pt50	1.5 K
GOST 6651-94 Platinum Pt500	
GOST 6651-94 Platinum Pt100	0.5 K
GOST 6651-94 Platinum Pt1000	
GOST 6651-94 Copper Cu50	1 K
GOST 6651-94 Copper Cu500	
GOST 6651-94 Copper Cu53	0.9 K
GOST 6651-94 Copper Cu100	0.5 K
GOST 6651-94 Brass CuZn100	0.5 K

When selecting "R_{Sensor} connection mode: 3-wire" the values for Δ_{RTD} are doubled.

10 Proof tests

Proof tests shall be undertaken to reveal dangerous faults which are undected by diagnostic tests. This means that it is necessary to specify how dangerous undetected faults which have been noted during the FMEDA can be detected during proof testing.
Ensure that the proof test is only carried out by qualified personnel.
A suggested proof test consists of the following steps:

Step	Action
1.	Bypass the safety functions and take appropriate action to avoid a false trip.
2.	Provide appropriate input-/control signals to the interface modules and verify the expected signal input/output conditions for the interfaces.
3.	Verify if internal fault detection is working in case it is activated.
4.	Provide appropriate input-/control signals to the interface modules and verify that the safety function is carried out correctly.
5.	Remove the bypass and otherwise restore normal operation.

Once the test has been completed, document and archive the results.

Proof test coverage: PTC = 97.27 %

11 Certificate

These products are certified by SGS-Saar for the use in safety-related applications. The certificate can be found under the following Link: www.turck.com

12 Document history

Document Version	Date	Modifications
1.0	2022-03-18	Initial version
2.0	2026-01-29	SIL card removed

TURCK

Your Global Automation Partner



Over 30 subsidiaries and
60 representations worldwide!

100034219 | 2026/01

www.turck.com