Inductive sensor
With increased switching distance
BI2-EG08-AG6X-0.3-RS4.23

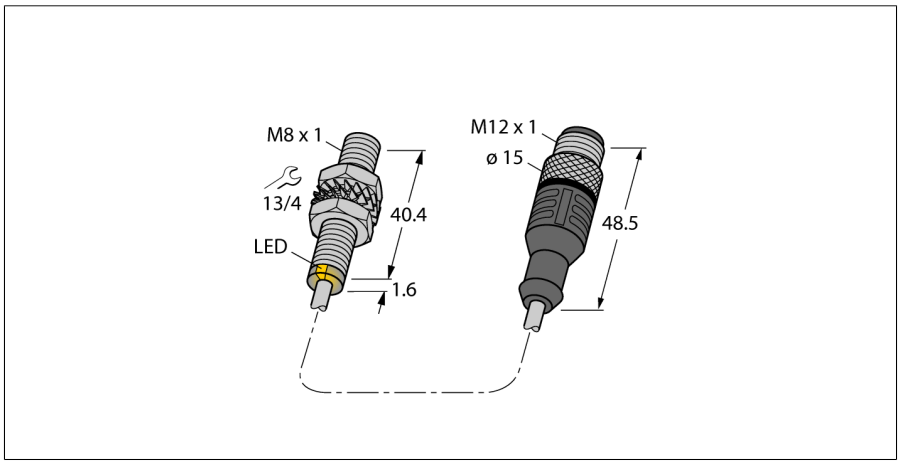

- **Threaded barrel, M8 x 1**
- **Stainless steel, 1.4427 SO**
- **Large sensing range**
- **DC 2-wire, 10…30 VDC**
- **NO contact**
- **Cable with connector**

Wiring Diagram

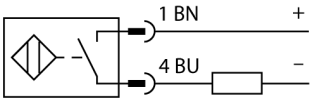

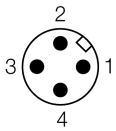

Type designation	BI2-EG08-AG6X-0.3-RS4.23
Ident no.	100000713
Rated switching distance Sn	2 mm
Mounting conditions	Flush
Secured operating distance	≤ (0,81 x Sn) mm
Correction factors	St37 = 1; Al = 0.3; stainless steel = 0.7; Ms = 0.4
Repeat accuracy	≤ 2 % of full scale
Temperature drift	≤ ± 10 %
Hysteresis	1…15 %
Ambient temperature	-25…+70 °C
Operating voltage	10…30 VDC
Residual ripple	≤ 10 % U_{ss}
DC rated operational current	≤ 100 mA
Residual current	≤ 0.6 mA
Isolation test voltage	≤ 0.5 kV
Short-circuit protection	yes/ Cyclic
Voltage drop at I_e	≤ 4.2 V
Smallest operating current I_m	≥ 3 mA
Switching frequency	0.3 kHz
Design	Threaded barrel,M8 × 1
Dimensions	42 mm
Housing material	Stainless steel, 1.4427 SO
Active area material	Plastic, PA12-GF30
End cap	Plastic, Trogamid
Material coupling nut	metal, CuZn, nickel-plated
Max. tightening torque housing nut	5 Nm
Electrical connection	Cable with connector, M12 × 1
Cable quality	3 mm, Gray, Lif9Y-11Y, PUR, 0.3m
Cable cross section	2 x 0.14 mm^2
Vibration resistance	55 Hz (1 mm)
Shock resistance	30 g (11 ms)
Protection class	IP67
MTTF	2283 years acc. to SN 29500 (Ed. 99) 40 °C
Packaging unit	1
Switching state	LED,Yellow

Functional principle

Inductive sensors detect metal objects contactless and wear-free. For this, they use a high-frequency electromagnetic AC field that interacts with the target. Inductive sensors generate this field via an RLC circuit with a ferrite coil.

Edition • 2018-04-23T13:51:20+02:00

Inductive sensor
With increased switching distance
BI2-EG08-AG6X-0.3-RS4.23

Distance D	2 x B
Distance W	3 x Sn
Distance T	3 x B
Distance S	1.5 x B
Distance G	6 x Sn

Diameter active area B	Ø 8 mm

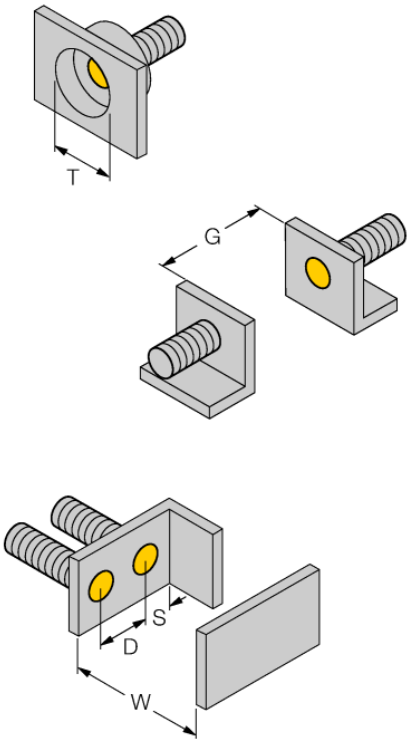

Edition • 2018-04-23T13:51:20+02:00

Hans Turck GmbH & Co.KG ● D-45472 Mülheim an der Ruhr ● Witzlebenstraße 7 ● Tel. 0208 4952-0 ● Fax 0208 4952-264 ● more@turck.com ● www.turck.com

Accessories

Type code	Ident no.	Description	
QM-08	6945100	Quick-mount bracket with dead-stop, chrome-plated brass, male thread M12 x 1. Note: The switching distance of proximity switches may be reduced through the use of quick-mount brackets.	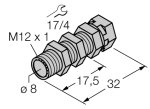
BST-08B	6947210	Fixing clamp for threaded barrel devices, with dead-stop; material: PA6	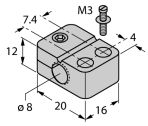
MW-08	6945008	Mounting bracket for threaded barrel devices; material: Stainless steel A2 1.4301 (AISI 304)	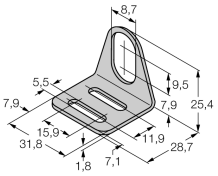
BSS-08	6901322	Mounting bracket for smooth and threaded barrel devices; material: Polypropylene	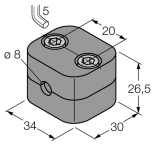
MBS80	69479	Mounting bracket for threaded barrel devices; material mounting block: Anodized aluminium	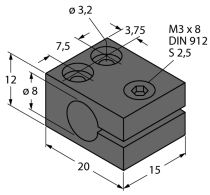

Edition • 2018-04-23T13:51:20+02:00