# PT0.1R-1544-I2-H1143/D840
# Pressure Transmitter – With Current Output (2-Wire)

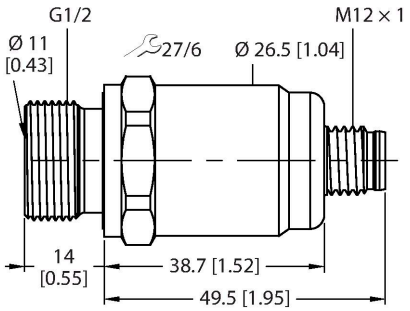





## Technical data

| | |
|---|---|
| Type | PT0.1R-1544-I2-H1143/D840 |
| ID | 100001382 |
| Special version | D840 Corresponds to:FPM seal |
| Pressure type | Relative pressure |
| Pressure range | 0…0.1 bar |
| | 0…1.45 psi |
| | 0…0.01 MPa |
| Admissible overpressure | ≤ 2 bar |
| Permissible vacuum | -0.3 bar |
| Burst pressure | ≥ 2 bar |
| Response time | < 150 ms |
| Adjustment position | Vertical, pressure connection at bottom |
| Vertical position error, pressure connection at top | + 0.2 mbar |
| Horizontal position error | + 0.1 mbar |
| Long-term stability | 0.25 % FS, Acc. to IEC EN 60770-1 |
| **Power supply** | |
| Operating voltage $U_B$ | 10…30 VDC |
| Current consumption | ≤ 23 mA |
| Short-circuit/reverse polarity protection | yes / yes |
| Protection class | IP67 |
| Insulation class | III |
| Insulation voltage | 500 VDC |
| **Outputs** | |
| Output 1 | Analog output |
| **Analog output** | |
| Current output | 4…20 mA |

## Features

- Ceramic measuring cell
- Extremely high measuring accuracy
- Compact and robust design
- Excellent temperature behavior
- Pressure range 0…100 mbar rel.
- 10…30 VDC
- Analog output 4…20 mA
- Process connection G1/2" male thread, back sealing with 11 mm inlet bore
- Plug-in device, M12 × 1

## Wiring diagram

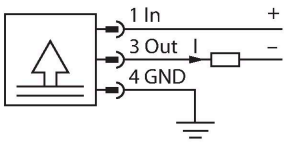


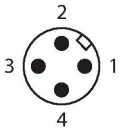


## Functional principle

The pressure sensors in the PT…-1500 product series operate with a ceramic measuring cell in various micropressure ranges of up to -100…600 mbar in 2- or 3-wire technology. Depending on the sensor variant, the processed signal is available as an analog output signal (4…20 mA, 0…10 V, 0…5 V, ratiometric).
In addition to the standard variants, there are special sensors for uses such as ATEX areas.

PT0.1R-1544-I2-H1143/D840| 22-02-2025 13-13 | Technical modifications reserved

## Technical data

A wide range of process connections and electrical connections offer a high degree of flexibility in a wide range of applications.

| | |
|---|---|
| Load | ≤ (supply voltage -10)/20 kΩ |
| Resolution | <± 0.1 % FS |
| Accuracy LHR | ±0.35 % FS (FS < 100 mbar ±0.7 % FS) |
| **Temperature behaviour** | |
| Medium temperature | -15…+85 °C |
| Temperature coefficient span TkS | ± 0.07 % FS/10 K |
| **Environmental conditions** | |
| Ambient temperature | -25…+85 °C |
| Storage temperature | -40…+85 °C |
| Vibration resistance | 20 g, 15…2000 Hz, 15…25 Hz with amplitude ± 15 mm, 1 octave/minute in all 3 directions, 50 continuous loads, according to IEC 68-2-6 |
| Shock resistance | 50 g, 6 ms, half sinusoidal curve, all 6 directions, free fall from 1 m onto concrete (6x) acc. to IEC 68-2-27 |
| **Mechanical data** | |
| Housing material | Stainless-steel/Plastic, 1.4404 (AISI 316L)/polyarylamide 50 % GF UL 94 V-0 |
| Pressure connection material | Stainless steel 1.4404 (AISI 316L) |
| Material pressure transducer | Ceramic $Al_2O_3$ |
| Sealing material | FPM |
| Process connection | G 1/2" male thread DIN 3852-E (rear sealing) with 11-mm bore |
| Wrench size pressure connection / coupling nut | 27 |
| Electrical connection | Connector, M12 × 1 |
| Max. tightening torque of housing nut | 27 Nm |
| **Reference conditions acc. to IEC 61298-1** | |
| Temperature | 15…+25 °C |
| Atmospheric pressure | 800…1060 hPa abs. |
| Humidity | 45 % rel. |
| Auxiliary power | 24 VDC |
| **Tests/approvals** | |
| Approvals | cULus |
| UL registration number | E302799 |
| MTTF | 965 years acc. to SN 29500 (Ed. 99) 40 °C |
| Included in delivery | Profile seal FKM special (1 pc) |

PT0.1R-1544-I2-H1143/D840| 22-02-2025 13-13 | Technical modifications reserved