FS54PK-2/M16
M12 Power Flange – Front-mounted

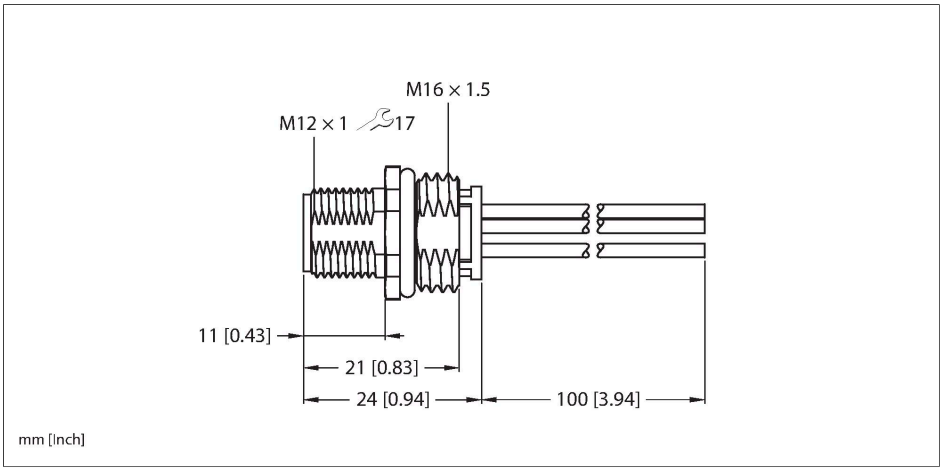

Features

■ M12-Stecker, K-codiert, 4-polig + PE

Contact assignment

Connector A

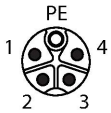

Circuit Diagram



Through bore

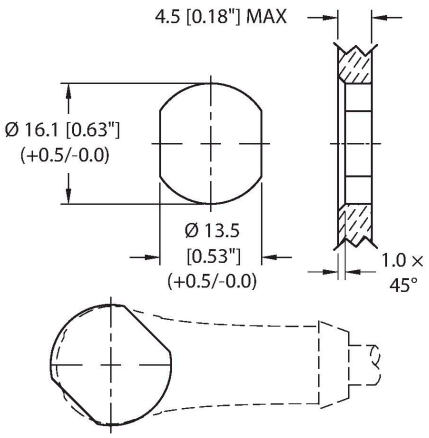

Technical data

Type	FS54PK-2/M16
ID	100003945
Connector A	Male, M12 × 1, K-coded
Design specification	acc. to IEC 61076-2-111
Number of pins	4+PE
Contacts	Brass, CuZn, Gold-plated
Contact carriers	Plastic, PA, Black
Flange housing	Brass, CuZn, Nickel-plated
Tightening torque (range)	0.4 … 1 Nm (observe max. torque of mating connector!)
Mounting type	front panel mounting
Screw-in thread seal	Gasket, NBR
Screw-in thread	M16 × 1.5
Flange tightening torque	2.5…7.3 Nm
Mechanical lifespan	> 100 Mating cycles
Pollution degree	3
Protection class	IP67, IP68
	NEMA: 1, 3, 4, 6P
Conductor data	
Number of cores	5
Cable length	2 m, (+ 50 mm or 4 % of the length/-0.0, depending on which value is larger)
Conductor material	TC (tinned copper)
Core insulation	PVC
Core cross-section	5 x 14 AWG [Similar to 2.50 mm²]
Core colors	BK1, BK2, BK3, BK4, GN/YE

FS54PK-2/M16| 23-02-2025 14-40 | Technical modifications reserved

Technical data

Electrical properties at +20 °C	
Rated voltage	630 V
Current	12 A
Mechanical and chemical properties	
Ambient temperature (fixed)	-40…+85 °C
Approvals	cULus recognized
Note	
	CAUTION: RISK OF ELECTRIC SHOCK! DO NOT DISCONNECT UNDER LOAD!
	- We reserve the right to make technical modifications without prior notice.

Threaded bore

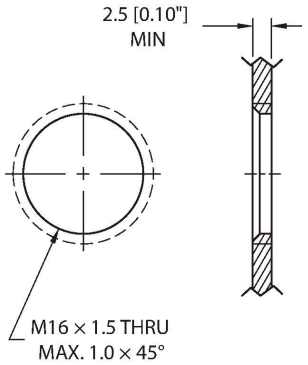

Front panel mounting

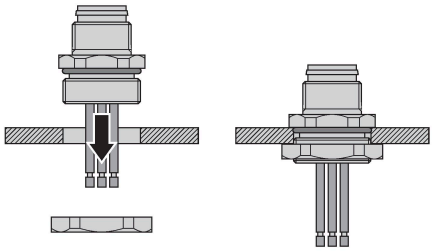

Derating curve

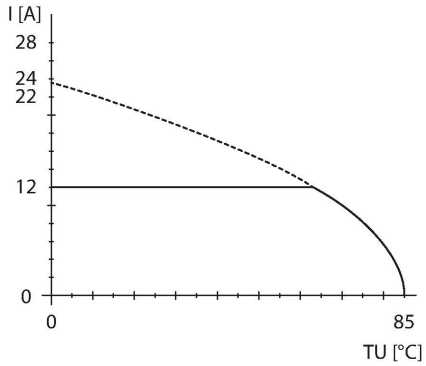

FS54PK-2/M16| 23-02-2025 14-40 | Technical modifications reserved