NI15-M30-AD6X-H1141
Inductive Sensor

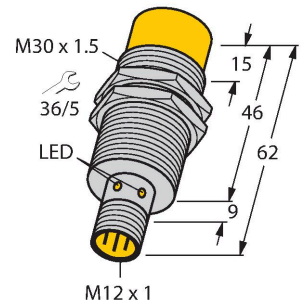

Features

- M30 × 1.5 threaded tube
- Chrome-plated brass
- DC 2-wire, 10…30 VDC
- NO contact
- M12 x 1 male connector

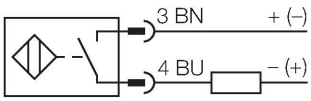

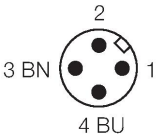

Technical data

Type	NI15-M30-AD6X-H1141
ID	100018023
General data	
Rated switching distance	15 mm
Mounting conditions	Non-flush
Secured operating distance	≤ (0.81 × Sn) mm
Correction factors	St37 = 1; Al = 0.3; stainless steel = 0.7; Ms = 0.4
Repeat accuracy	≤ 2 % of full scale
Temperature drift	≤ ±10 %
Hysteresis	1…15 %
Electrical data	
Operating voltage U_B	10…30 VDC
Ripple U_{ss}	≤ 10 % U_{Bmax}
DC rated operating current I_e	≤ 100 mA
Residual current	≤ 0.6 mA
Isolation test voltage	0.5 kV
Short-circuit protection	yes/Cyclic
Voltage drop at I_e	≤ 5 V
Wire break/reverse polarity protection	Complete
Output function	NO contact, 2-wire
Smallest operating current	≥ 3 mA
Switching frequency	0.5 kHz
Mechanical data	
Design	Threaded barrel, M30 x 1.5
Dimensions	62 mm
Housing material	Metal, CuZn, Chrome-plated

Functional principle

Inductive sensors detect metal objects contactless and wear-free. For this, they use a high-frequency electromagnetic AC field that interacts with the target. Inductive sensors generate this field via an RLC circuit with a ferrite coil.

NI15-M30-AD6X-H1141| 21-02-2025 15-17 | Technical modifications reserved

Technical data

Active area material	Plastic, PA12-GF30
Max. tightening torque of housing nut	75 Nm
Electrical connection	Connector, M12 × 1
Environmental conditions	
Ambient temperature	-25…+70 °C
Vibration resistance	55 Hz (1 mm)
Shock resistance	30 g (11 ms)
Protection class	IP67
MTTF	2283 years acc. to SN 29500 (Ed. 99) 40 °C
Switching state	LED, Yellow

Mounting instructions

Mounting instructions/Description

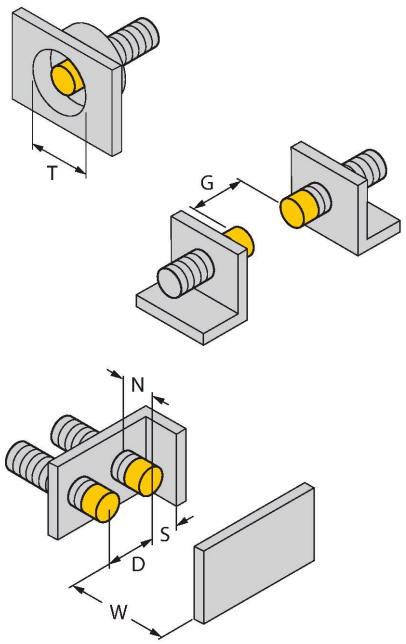

Distance D	3 x B
Distance W	3 x Sn
Distance T	3 x B
Distance S	1.5 x B
Distance G	6 x Sn
Distance N	20 mm
Diameter active area B	Ø 30 mm

Accessories

BST-30B 6947216

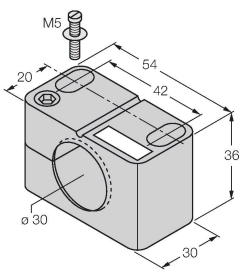

Mounting clamp for threaded barrel sensors, with dead-stop; material: PA6

QM-30 6945103

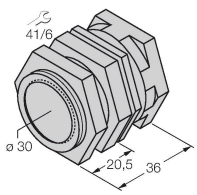

Quick-mount bracket with dead-stop; material: Chrome-plated brass. Male thread M36 × 1.5. Note: The switching distance of the proximity switches may change when using quick-mount brackets.

NI15-M30-AD6X-H1141| 21-02-2025 15-17 | Technical modifications reserved

MW30	6945005

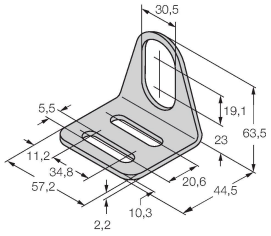

Mounting bracket for threaded barrel sensors; material: Stainless steel A2 1.4301 (AISI 304)

BSS-30	6901319

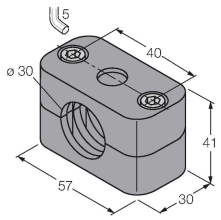

Mounting clamp for smooth and threaded barrel sensors; material: Polypropylene

NI15-M30-AD6X-H1141| 21-02-2025 15-17 | Technical modifications reserved