PS311-2.5V-09-LI2UPN8-H1141
Front-Flush Pressure Sensor – Relative Pressure: -1…2.5 Bar

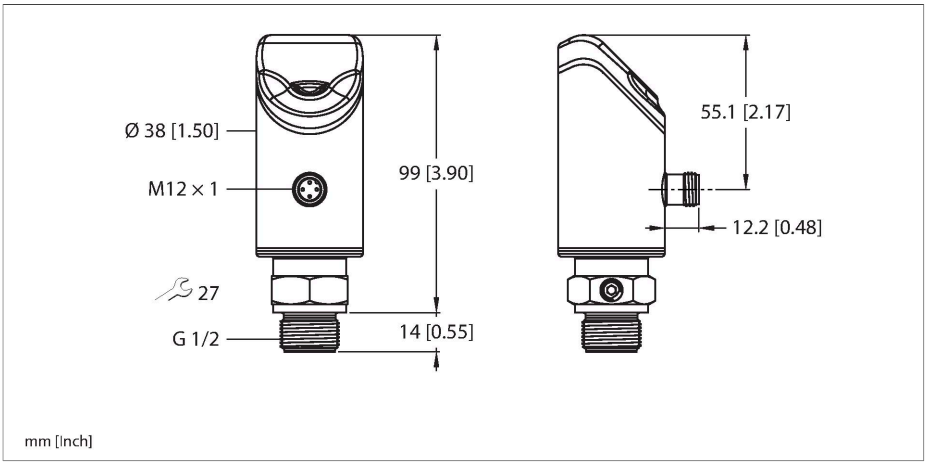



Technical data

Type	PS311-2.5V-09-LI2UPN8-H1141
ID	100021439
Medium temperature	-30…+80 °C
Application area	Liquids and gases
Pressure range	
Pressure type	Relative pressure
Pressure range	-1…2.5 bar
	-14.5…36.26 psi
	-0.1…0.25 MPa
Admissible overpressure	≤ 12 bar
Burst pressure	≥ 12 bar
Response time	≤ 3 ms
Electrical data	
Operating voltage U_B	18…33 VDC
Short-circuit/reverse polarity protection	yes, cyclic / yes (voltage supply)
Capacitive load	100 nF
Insulation class	III
Outputs	
Output 1	Switching output or IO-Link mode
Output 2	Analog or switching output
Switching output	
Communication protocol	IO-Link
Output function	NO/NC, PNP/NPN
Accuracy	± 0.5 % FS BSL
Rated operational current	0.25 A
Switching frequency	≤ 300 Hz
Switching point distance	≥ 0.5 %

Features

- 4-digit, 2-color (red/green), 12-segment display, rotatable by 180°
- Housing is rotatable after mounting the process connection
- Ceramic measuring cell
- 18…33 VDC
- NO/NC contact, PNP/NPN output, analog output (current/voltage), IO-Link
- Pressure connection with front-flush mounted diaphragm (stainless steel)
- Process connection G1/2" front-flush male thread
- M12 × 1 connector device

Wiring diagram

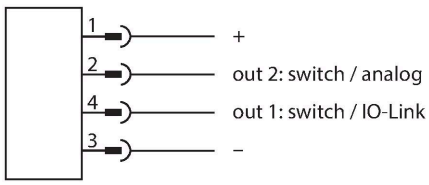

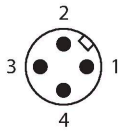

Functional principle

The pressure sensors from the PS310 product series operate with ceramic measuring cells. As a result of the pressure acting on the ceramic substrate, a signal that is proportional to the pressure is generated and processed electronically. The processed signal is available either as a switching or an analog output with an accuracy of 0.5% of full scale. The rotatable sensor body and a variety

PS311-2.5V-09-LI2UPN8-H1141| 22-02-2025 08-16 | Technical modifications reserved

Technical data

Switch point:	(Min. + 0.005 × range)…100 % of full scale
Release point(s)	min. up to (SP - 0.005 × range)
Switching cycles	≥ 100 mil.
Analog output	
Current output	4…20 mA
High level signal current	20.5 mA
Low level signal current	3.8 mA
Load resistance current output	≤ 0.5 kΩ
Voltage output	0…10 V
Load resistance voltage output	≥ 8 kΩ
IO-Link	
IO-Link specification	V 1.1
IO-Link port type	Class A
Transmission physics	corresponds to 3-wire physics (PHY2)
Transmission rate	COM 2/38.4 kbps
Process data width	16 bit
Measured value information	14 bit
Switching point information	2 bit
Frame type	2.2
Programming	FDT/DTM
Accuracy	± 0.5 % FS BSL
Included in the SIDI GSDML	Yes
Programming	
Programming options	start/end value analog output; switch/release points; PNP/NPN; NO/NC contact; hysteresis/window function; damping; pressure unit; peak pressure memory
Mechanical data	
Housing material	Stainless-steel/Plastic, 1.4404 (AISI 316L)/Grilamid TR90 UV/Elastollan C 65 A 15 HPM 000/Ultramid A3X2G5
Materials (contact with media)	Stainless steel 1.4435 (AISI 316L), FPM specific
Process connection	G 1/2" male thread, front-flush
Max. tightening torque of housing nut	35 Nm
Electrical connection	Connector, M12 × 1
Protection class	IP66 IP67 IP69K
Environmental conditions	
Ambient temperature	-40…+80 °C
Storage temperature	-40…+80 °C
Shock resistance	50 g (11 ms) DIN EN 60068-2-27

of process connections guarantee flexible process integration.

PS311-2.5V-09-LI2UPN8-H1141| 22-02-2025 08-16 | Technical modifications reserved

Technical data

EMV	EN 61000-4-2 ESD:4 kV CD / 8 kV AD EN 61000-4-3 HF radiated: 15 V/m EN 61000-4-4 Burst: 2 kV EN 61000-4-6 HF cable bound: 10 V EN 61000-6-2 0.5 kV, 42 Ω EN 61326-2-3
Tests/approvals Reference conditions acc. to IEC 61298-1	
Temperature	15…+25 °C
Atmospheric pressure	860…1030 hPa abs.
Humidity	45…75 % rel.
Auxiliary power	24 VDC
Displays/Operating elements	
Display	4-digit 12-segment display, rotatable by 180°, red or green
Switching state	2 × LEDs, Yellow
Unit display	5 x LEDs green (bar, psi, kPa, MPa, misc)
Temperature behaviour	
Temperature coefficient range TK_s	± 0.15 % of full scale/10 K
Temperature coefficient zero point TK_0	± 0.15 % of full scale/10 K
MTTF	acc. to SN 29500 (Ed. 99) 40 °C
Included in delivery	NBR70 flat seal (USIT ring, nitrile rubber), 1 pc.

Accessories

Dimension drawing	Type	ID	
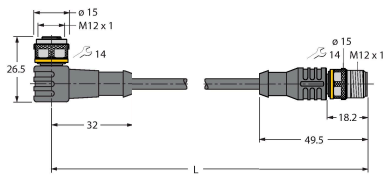	WKC4.4T-2-RSC4.4T/TXL	6625640	Extension cable, M12 female connector, angled, 4-pin to M12 male connector, straight, 4-pin, cable length: 2 m, jacket material: PUR, black; cULus approval
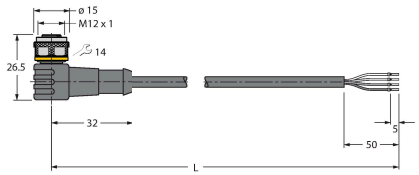	WKC4.4T-2/TXL	6625515	Connection cable, M12 female connector, angled, 4-pin, cable length: 2 m, jacket material: PUR, black; cULus approval

PS311-2.5V-09-LI2UPN8-H1141| 22-02-2025 08-16 | Technical modifications reserved

Accessories

Dimension drawing	Type	ID	
	USB-2-IOL-0002	6825482	IO-Link Master with integrated USB port

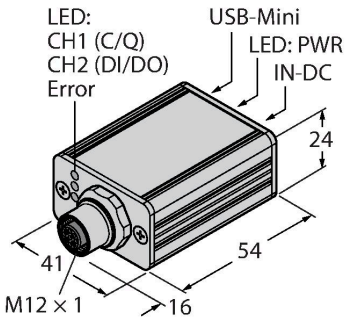

PS311-2.5V-09-LI2UPN8-H1141| 22-02-2025 08-16 | Technical modifications reserved