PT1V-2004-I2-H1141
Pressure Transmitter – With Current Output (2-Wire)

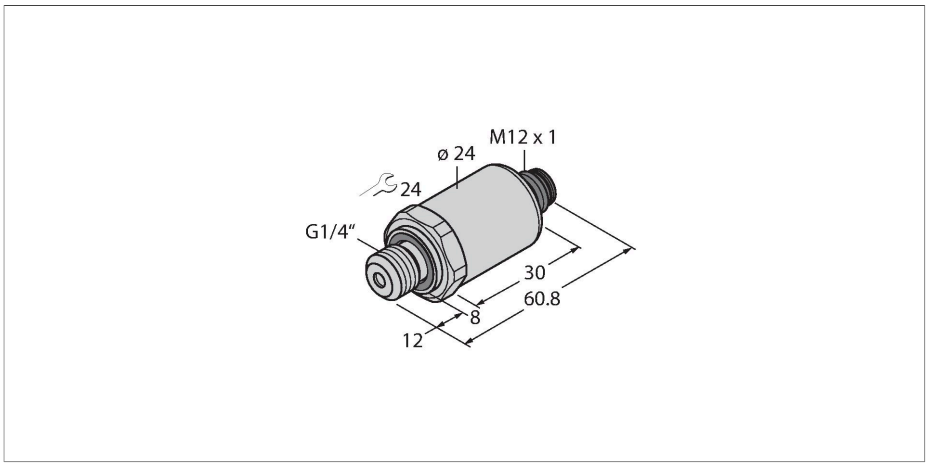

Technical data

Type	PT1V-2004-I2-H1141
ID	100035903
Pressure type	Relative pressure
Pressure range	-1…1 bar
	-14.5…14.5 psi
	-0.1…0.1 MPa
Admissible overpressure	≤ 12.5 bar
Burst pressure	≥ 25 bar
Response time	< 2 ms, typ. 1 ms
Long-term stability	0.25 % FS, according to IEC EN 60770-1
Power supply	
Operating voltage U_B	7…33 VDC
Current consumption	≤ 23 mA
Short-circuit/reverse polarity protection	yes / yes
Protection class	IP67
Insulation class	III
Insulation voltage	750 VDC
Outputs	
Output 1	Analog output
Output function	Analog output current
Analog output	
Current output	4…20 mA
Load	≤ (supply voltage -7)/20 kΩ
Resolution	<± 0.1 % FS
Accuracy LHR	±0.3 % FS (typical; max. ±0.5 % FS)

Features

- Fully welded metal measuring cell
- Pressure range -1…1 bar rel.
- 7…33 VDC
- Analog output 4…20 mA
- Process connection G1/4" male thread (back sealing) according to DIN EN ISO 1179-2 with FPM profile sealing ring
- Connector device, M12 × 1

Wiring diagram

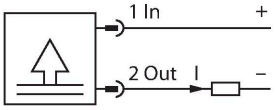

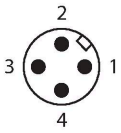

Functional principle

The pressure sensors in the PT…-2000 product series operate with a fully welded metal measuring cell in various pressure ranges of up to -1…1000 bar in 2-, 3- or even 4-wire technology. Depending on the sensor variant, the processed signal is available as an analog output signal (4…20 mA, 0… 10 V, 0…5 V, 1…6 V, ratiometric) or as a digital IO-Link process parameter. The IO-Link sensor variants also have two independently configurable switching outputs.
In addition to the standard variants, there are special sensors for uses such as ATEX areas or for oxygen applications.
A wide range of process connections and electrical connections offer a high degree of flexibility in a wide range of applications.

PT1V-2004-I2-H1141| 22-02-2025 13-10 | Technical modifications reserved

Technical data

Temperature behaviour	
Medium temperature	-40…+135 °C
Temperature coefficient	± 0.2 % of full scale/10 K
Environmental conditions	
Ambient temperature	-30…+85 °C
Storage temperature	-50…+100 °C
Vibration resistance	20 g, 15…2000 Hz, 15…25 Hz with amplitude ± 15 mm, 1 octave/minute in all 3 directions, 50 continuous loads, acc. to IEC 68-2-6
Shock resistance	100 g, 11 ms, half sinusoidal curve, all 6 directions, free fall from 1 m onto concrete (6x) acc. to IEC 68-2-27
Mechanical data	
Housing material	Stainless-steel/Plastic, 1.4404 (AISI 316L)/polyarylamide 50 % GF UL 94 V-0
Pressure connection material	Stainless steel 1.4404 (AISI 316L)
Material pressure transducer	Stainless steel 1.4016 (AISI 430)
Process connection	G1/4" male thread (back sealing) according to DIN EN ISO 1179-2 with FPM profile sealing ring
Wrench size pressure connection / coupling nut	24
Electrical connection	Connector, M12 × 1
Max. tightening torque of housing nut	20 Nm
Reference conditions acc. to IEC 61298-1	
Temperature	15…+25 °C
Atmospheric pressure	860…1060 hPa abs.
Humidity	45…75 % rel.
Auxiliary power	24 VDC
Tests/approvals	
Approvals	cULus
UL registration number	E302799
MTTF	1189 years acc. to SN 29500 (Ed. 99) 40 °C
Included in delivery	FKM special profile seal (1x)

PT1V-2004-I2-H1141| 22-02-2025 13-10 | Technical modifications reserved

Accessories

Dimension drawing	Type	ID	
	RKC4.4T-2/TXL	6625503	Connection cable, M12 female connector, straight, 4-pin, cable length: 2 m, jacket material: PUR, black; cULus approval
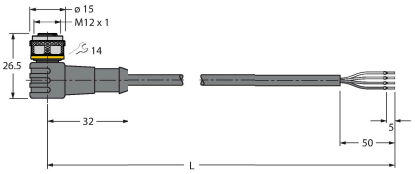	WKC4.4T-2/TXL	6625515	Connection cable, M12 female connector, angled, 4-pin, cable length: 2 m, jacket material: PUR, black; cULus approval
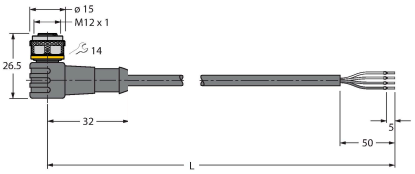	WKC4.4T-2/TEL	6625025	Connection cable, M12 female connector, angled, 4-pin, cable length: 2 m, jacket material: PVC, black; cULus approval
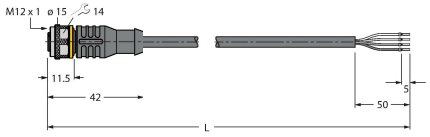	RKC4.4T-2/TEL	6625013	Connection cable, M12 female connector, straight, 4-pin, cable length: 2 m, jacket material: PVC, black; cULus approval

PT1V-2004-I2-H1141| 22-02-2025 13-10 | Technical modifications reserved