PT5V-2043-IOL-H1141
Pressure Transmitter – IO-Link with Two Switching Outputs

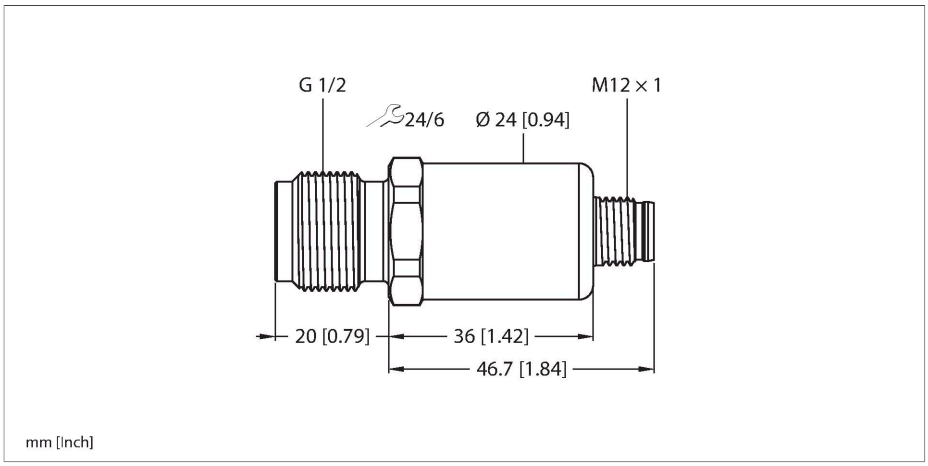



Technical data

Type	PT5V-2043-IOL-H1141
ID	100041480
Pressure type	Relative pressure
Pressure range	-1…5 bar
	-14.5…72.52 psi
	-0.1…0.5 MPa
Admissible overpressure	≤ 30 bar
Burst pressure	≥ 60 bar
Response time	< 2 ms, typ. 1 ms
Long-term stability	0.25 % FS, according to IEC EN 60770-1
Power supply	
Operating voltage U_B	18…33 VDC
	In IO-Link mode
	9…33 VDC
	In SIO mode
Short-circuit/reverse polarity protection	yes / yes
Protection class	IP67
Insulation class	III
Insulation voltage	750 VDC
Outputs	
Output 1	Switching output or IO-Link mode
Output 2	Switching output
Switching output	
Communication protocol	IO-Link
Output function	NO/NC, PNP/NPN
Switching current	≤ 100 mA

Features

- Fully welded metal measuring cell
- Pressure range -1…5 bar rel.
- 18…33 V DC
- NO/NC contact, 2 × PNP/NPN outputs, IO-Link
- Process connection G1/2" male thread, front sealing
- Connector device, M12 × 1

Wiring diagram

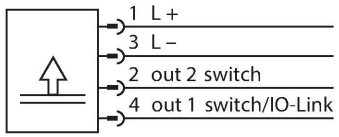

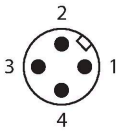

Functional principle

The pressure sensors in the PT…-2000 product series operate with a fully welded metal measuring cell in various pressure ranges of up to -1…1000 bar in 2-, 3- or even 4-wire technology. Depending on the sensor variant, the processed signal is available as an analog output signal (4…20 mA, 0… 10 V, 0…5 V, 1…6 V, ratiometric) or as a digital IO-Link process parameter. The IO-Link sensor variants also have two independently configurable switching outputs.
In addition to the standard variants, there are special sensors for uses such as ATEX areas or for oxygen applications.

PT5V-2043-IOL-H1141| 22-02-2025 13-11 | Technical modifications reserved

Technical data

A wide range of process connections and electrical connections offer a high degree of flexibility in a wide range of applications.

Switching frequency	≤ 100 Hz
Switching point distance	≥ 0.5 %
Switch point:	(Min. + 0.005 × range)…100 % of full scale
Release point(s)	Min. up to (SP - 0.005 × range)
Switching cycles	≥ 100 mil.
Switch point SP1	Factory setting: 50 % of measuring range end value
Release point rP1	Factory setting: 25 % of measuring range end value
Switching point SP2	Factory setting: 60 % of measuring range end value
Release point rP2	Factory setting: 30 % of measuring range end value
Resolution	<± 0.1 % FS
Accuracy LHR	±0.3 % FS (typical; max. ±0.5 % FS)
IO-Link	
IO-Link specification	V 1.1
Programming	FDT/DTM
Transmission physics	corresponds to 3-wire physics (PHY2)
Transmission rate	COM 2/38.4 kbps
Frame type	2.2
Temperature behaviour	
Medium temperature	-40…+135 °C
Temperature coefficient	± 0.2 % of full scale/10 K
Environmental conditions	
Ambient temperature	-30…+85 °C
Storage temperature	-50…+100 °C
Vibration resistance	20 g, 15…2000 Hz, 15…25 Hz with amplitude ± 15 mm, 1 octave/minute in all 3 directions, 50 continuous loads, acc. to IEC 68-2-6
Shock resistance	100 g, 11 ms, half sinusoidal curve, all 6 directions, free fall from 1 m onto concrete (6x) acc. to IEC 68-2-27
Mechanical data	
Housing material	Stainless-steel/Plastic, 1.4404 (AISI 316L)/polyarylamide 50 % GF UL 94 V-0
Pressure connection material	Stainless steel 1.4404 (AISI 316L)
Material pressure transducer	Stainless steel 1.4016 (AISI 430)
Process connection	G 1/2" male thread (front sealing)
Wrench size pressure connection / coupling nut	24
Electrical connection	Connector, M12 × 1
Max. tightening torque of housing nut	20 Nm

PT5V-2043-IOL-H1141| 22-02-2025 13-11 | Technical modifications reserved

Technical data

Reference conditions acc. to IEC 61298-1	
Temperature	15…+25 °C
Atmospheric pressure	860…1060 hPa abs.
Humidity	45…75 % rel.
Auxiliary power	24 VDC
Programming options	Offset; filter; switching points; hysteresis/filter function, NC/NO; min./max. pressure values, pressure peak counter; operating hours counter
Tests/approvals	
Approvals	cULus
UL registration number	E302799
MTTF	1200 years acc. to SN 29500 (Ed. 99) 40 °C

Accessories

Dimension drawing	Type	ID	
	RKC4.4T-2/TXL	6625503	Connection cable, M12 female connector, straight, 4-pin, cable length: 2 m, jacket material: PUR, black; cULus approval
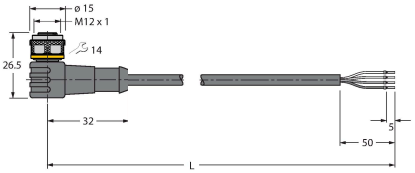	WKC4.4T-2/TXL	6625515	Connection cable, M12 female connector, angled, 4-pin, cable length: 2 m, jacket material: PUR, black; cULus approval
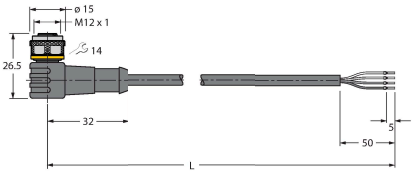	WKC4.4T-2/TEL	6625025	Connection cable, M12 female connector, angled, 4-pin, cable length: 2 m, jacket material: PVC, black; cULus approval
	RKC4.4T-2/TEL	6625013	Connection cable, M12 female connector, straight, 4-pin, cable length: 2 m, jacket material: PVC, black; cULus approval

PT5V-2043-IOL-H1141| 22-02-2025 13-11 | Technical modifications reserved

Accessories

Dimension drawing	Type	ID	
	USB-2-IOL-0002	6825482	IO-Link Master with integrated USB port

