Inductive sensor
Ring sensor
BI20R-W30-AP6X-H1141

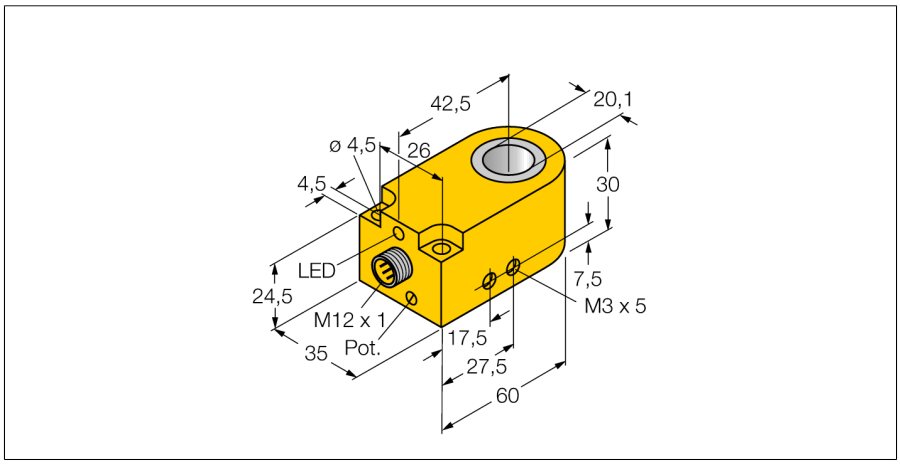

- **Rectangular, height 30 mm**
- **Plastic, PA12-GF30**
- **Static output behaviour**
- **Output pulse length min. 100 ms**
- **DC 3-wire, 10…30 VDC**
- **NO contact, PNP output**
- **M12 x 1 male connector**

Wiring diagram

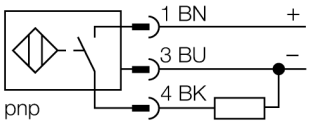

Type code	BI20R-W30-AP6X-H1141
Ident no.	1403230
Inside ring diameter D	20.1 mm
Steel ball diameter (DIN 5401)	≥ 2 mm
pulse stop	≥ 5 ms
Pulse duration at the ouput	100 ms ± 20 %
Ambient temperature	-25…+70 °C
Operating voltage	10…30VDC
Residual ripple	≤ 10 % U_{ss}
DC rated operational current	≤ 200 mA
No-load current I_0	≤ 15 mA
Residual current	≤ 0.1 mA
Rated insulation voltage	≤ 0.5 kV
Short-circuit protection	yes/ cyclic
Voltage drop at I_e	≤ 1.8 V
Wire breakage / Reverse polarity protection	yes/ complete
Output function	3-wire, NO contact, PNP
Switching frequency	0.008 kHz
Construction	ring sensor, W30
Dimensions	60 x 35 x 30 mm
Housing material	plastic, PA
Connection	male, M12 x 1
Coil body	plastic, POM
Vibration resistance	55 Hz (1 mm)
Shock resistance	30 g (11 ms)
IP Rating	IP67
MTTF	2283 years acc. to SN 29500 (Ed. 99) 40 °C
Switching state	LED yellow

Functional principle

Inductive sensors detect metal objects contactless and wear-free. For this purpose they use a high-frequency electromagnetic AC field that interacts with the target. Inductive ring sensors generate this field through an LC resonant circuit. The target acts as the coil core.

Output behaviour

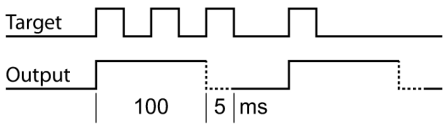

Edition • 2015-07-27T15:11:12+02:00

Inductive sensor
Ring sensor
BI20R-W30-AP6X-H1141

Distance D	120 mm
Distance W	120 mm
Distance S	20 mm
Distance G	120 mm

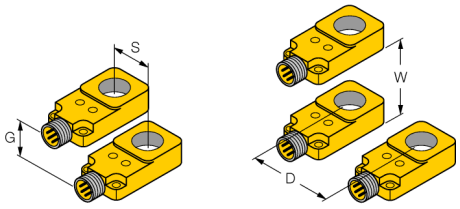

Edition • 2015-07-27T15:11:12+02:00

Hans Turck GmbH & Co.KG ● D-45472 Mülheim an der Ruhr ● Witzlebenstraße 7 ● Tel. 0208 4952-0 ● Fax 0208 4952-264 ● more@turck.com ● www.turck.com

Accessories

Type code	Ident no.	Description	Design
BS-Bi20R-W30	6900401	Fixing clamp for direct mounting on the pipe or tube; clamping ability 19…20 mm; material: POM; included in scope of supply: 1x M4 x 30 (DIN 912-A2); 2x M4 x 35 (DIN 912-A2)	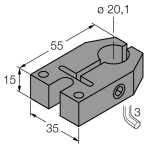

Edition • 2015-07-27T15:11:12+02:00