# Inductive sensor
# BI20U-CA40-VP4X2-H1141

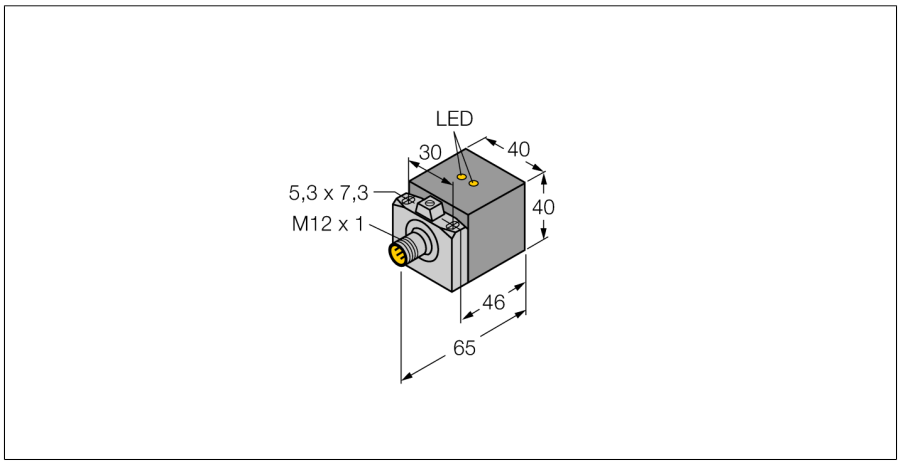


- **Rectangular, height 40 mm**
- **Variable orientation of active face in 5 directions**
- **Sensor housing GD-ALSI 12**
- **Plastic, PA6-GF30**
- **Factor 1 for all metals**
- **Resistant to magnetic fields**
- **High switching frequency**
- **DC 4-wire, 10…65 VDC**
- **Changeover contact, PNP output**
- **M12 x 1 male connector**

| | |
|---|---|
| **Type code** | BI20U-CA40-VP4X2-H1141 |
| Ident no. | 1500113 |
| **Rated switching distance Sn** | 20 mm |
| Mounting conditions | flush |
| Assured switching distance | ≤ (0,81 x Sn) mm |
| Repeatability | ≤ 2 % of full scale |
| Temperature drift | ≤ ± 10 % |
| Hysteresis | 3…15 % |
| Ambient temperature | 0…+70 °C |
| **Operating voltage** | 10…65VDC |
| Residual ripple | ≤ 10 % $U_{ss}$ |
| DC rated operational current | ≤ 200 mA |
| No-load current $I_0$ | ≤ 15 mA |
| Residual current | ≤ 0.1 mA |
| Rated insulation voltage | ≤ 0.5 kV |
| Short-circuit protection | yes |
| Voltage drop at $I_e$ | ≤ 1.8 V |
| Wire breakage / Reverse polarity protection | yes/ complete |
| Output function | 4-wire, changover contact, PNP |
| Protective insulation | ⧈ |
| Switching frequency | 0.25 kHz |
| **Construction** | rectangular, CA40 |
| Dimensions | 48 x 40 x 40 mm |
| | variable orientation of active face in 5 directions |
| Housing material | metal, GD-AlSi 12 |
| Connection | male, M12 x 1 |
| Vibration resistance | 55 Hz (1 mm) |
| Shock resistance | 30 g (11 ms) |
| IP Rating | IP67 |
| MTTF | 874 years acc. to SN 29500 (Ed. 99) 40 °C |
| **Power-on indication** | LED green |
| Switching state | LED yellow |
| Included in delivery | BS1-CK40 |

## Wiring diagram

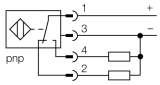


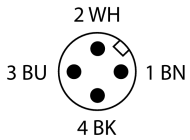


## Functional principle

Inductive sensors detect metal objects contactless and wear-free. *uprox*® Factor 1 sensors have significant advantages due to their patented ferrite-coreless multicoil system. They detect all metals at the same large switching distance and are resistant to magnetic fields.

Edition • 2015-07-27T15:14:36+02:00


Hans Turck GmbH & Co.KG ● D-45472 Mülheim an der Ruhr ● Witzlebenstraße 7 ● Tel. 0208 4952-0 ● Fax 0208 4952-264 ● more@turck.com ● www.turck.com

| | |
|---|---|
| **Distance D** | 2 x B |
| Distance W | 3 x Sn |
| Distance S | 1 x B |
| Distance G | 6 x Sn |

| | |
|---|---|
| **Width of the active face B** | 40 mm |

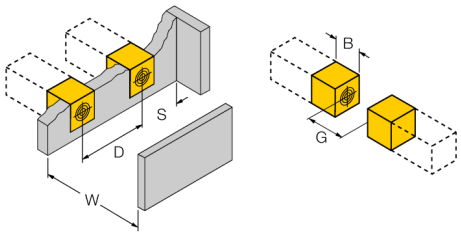

## Accessories

| Type code | Ident no. | Description | Design |
|---|---|---|---|
| BSS-CP40 | 6901318 | Mounting bracket for rectangular devices; material: Polypropylene | 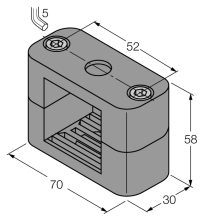 |



Edition • 2015-07-27T15:14:36+02:00