Inductive sensor
BI15U-CK40-AP4X2-H1141

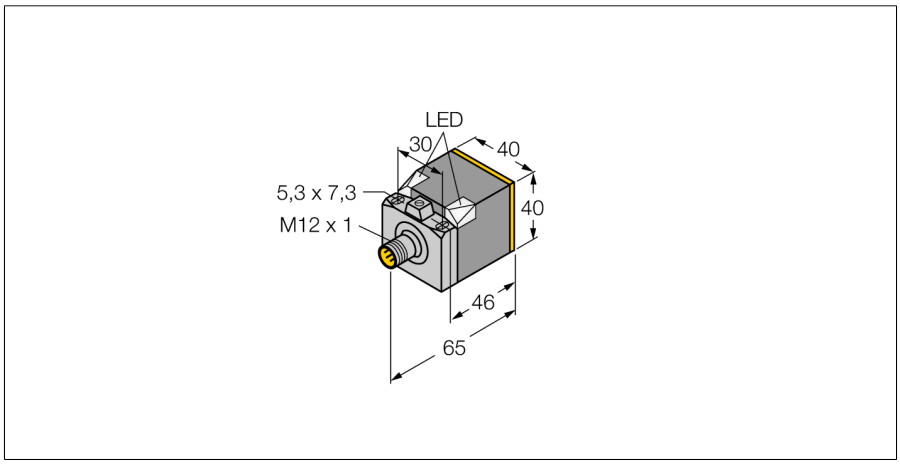

- **Rectangular, height 40 mm**
- **Variable orientation of active face in 5 directions**
- **Plastic, PBT-GF30-V0**
- **High luminance corner LEDs**
- **Optimum view on supply voltage and switching state from any position**
- **Factor 1 for all metals**
- **Protection class IP68**
- **Resistant to magnetic fields**
- **Extended temperature range**
- **High switching frequency**
- **3-wire DC, 10…65 VDC**
- **NO contact, PNP output**
- **Male M12 x 1**

Type code	BI15U-CK40-AP4X2-H1141
Ident no.	1538000

Rated operating distance Sn	15 mm
Mounting condition	flush
Assured sensing range	≤ (0,81 x Sn) mm
Repeatability	≤ 2 % of full scale
Temperaturdrift	10 %
	≤ ± 15 %, ≤ -25 °C v ≥ +70 °C
Hysteresis	3…15 %
Ambient temperature	-30…+85 °C

Operating voltage	10…65VDC
Residual ripple	≤ 10 % U_{ss}
DC rated operational current	≤ 200 mA
No-load current I_0	≤ 15 mA
Residual current	≤ 0.1 mA
Rated insulation voltage	≤ 0.5 kV
Short-circuit protection	yes/ cyclic
Voltage drop at I_e	≤ 1.8 V
Wire breakage / Reverse polarity protection	yes/ complete
Output function	3-wire, NO contact, PNP
Protection class	⧈
Switching frequency	0.25 kHz

Design	rectangular, CK40
Dimensions	65 x 40 x 40 mm
	variable orientation of active face in 5 directions
Housing material	plastic, PBT, black
Connection	male, M12 x 1
Vibration resistance	55 Hz (1 mm)
Shock resistance	30 g (11 ms)
Protection class	IP68
MTTF	874 years acc. to SN 29500 (Ed. 99) 40 °C

Power-on indication	2 x LEDs green
Switching state	LED yellow
Included in scope of supply	BS1-CK40

Wiring diagram

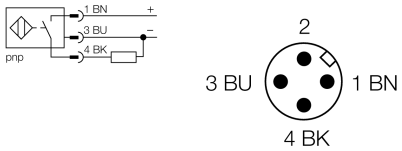

Functional principle

Inductive sensors detect metal objects contactless and wear-free. Due to the patented multicoil system, *uprox*®+ sensors have distinct advantages over conventional sensors. They detect all metals at the same large switching distance and are resistant to magnetic fields.

Edition • 2013-12-21T03:05:32+01:00

Distance D	80 mm
Distance W	45 mm
Distance S	40 mm
Distance G	90 mm
Width of the active face B	40 mm

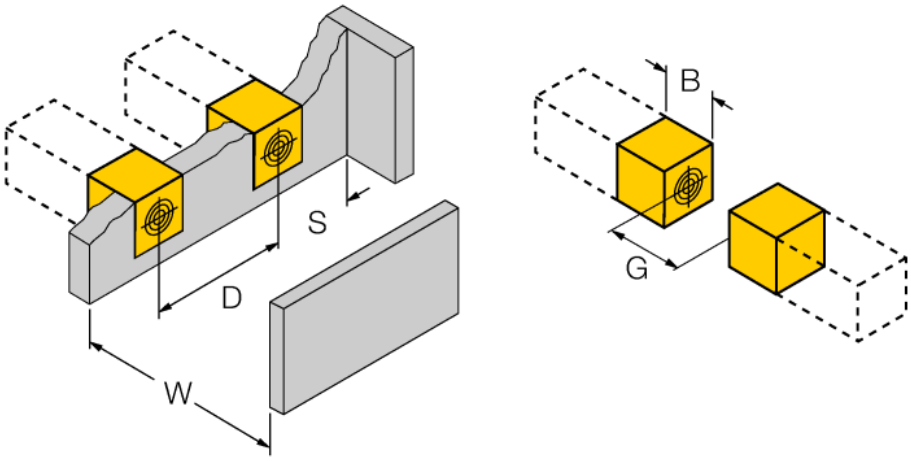

Edition • 2013-12-21T03:05:32+01:00

Accessories

Type code	Ident no.	Description	Dimension drawing
BSS-CP40	6901318	Mounting bracket for rectangular devices; material: Polypropylene	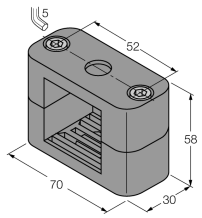

Edition • 2013-12-21T03:05:32+01:00

 Hans Turck GmbH & Co.KG ● D-45472 Mülheim an der Ruhr ● Witzlebenstraße 7 ● Tel. 0208 4952-0 ● Fax 0208 4952-264 ● more@turck.com ● www.turck.com