# Inductive sensor
# NI25U-CK40-AP4X2-H1141

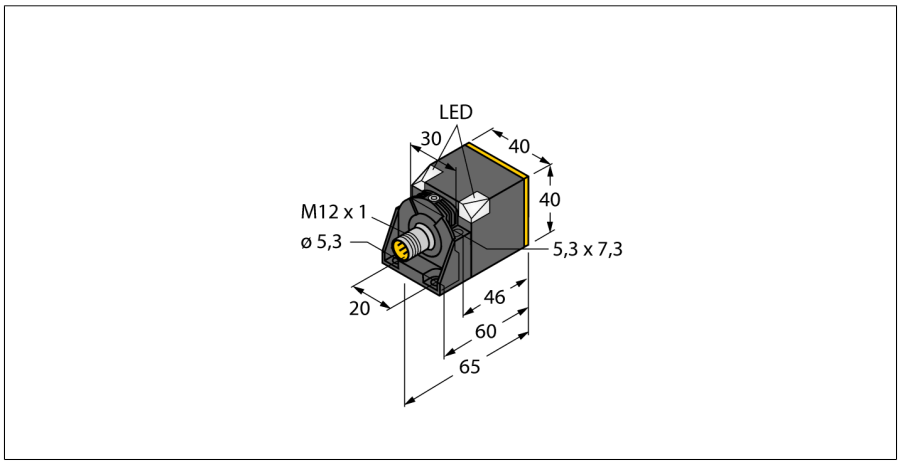


- **Rectangular, height 40 mm**
- **Variable orientation of active face in 5 directions**
- **Plastic, PBT-GF30-V0**
- **High luminance corner LEDs**
- **Optimum view on supply voltage and switching state from any position**
- **Factor 1 for all metals**
- **Protection class IP68**
- **Resistant to magnetic fields**
- **Extended temperature range**
- **High switching frequency**
- **DC 3-wire, 10…65 VDC**
- **NO contact, PNP output**
- **M12 x 1 male connector**

| | |
|---|---|
| **Type code** | NI25U-CK40-AP4X2-H1141 |
| Ident no. | 1538200 |

| | |
|---|---|
| **Rated switching distance Sn** | 25 mm |
| Mounting conditions | non-flush |
| Assured switching distance | ≤ (0,81 x Sn) mm |
| Repeatability | ≤ 2 % of full scale |
| Temperature drift | ≤ ± 10 % |
| | ≤ ± 15 %, ≤ -25 °C v ≥ +70 °C |
| Hysteresis | 3…15 % |
| Ambient temperature | -30…+85 °C |

| | |
|---|---|
| **Operating voltage** | 10…65VDC |
| Residual ripple | ≤ 10 % $U_{ss}$ |
| DC rated operational current | ≤ 200 mA |
| No-load current $I_0$ | ≤ 15 mA |
| Residual current | ≤ 0.1 mA |
| Rated insulation voltage | ≤ 0.5 kV |
| Short-circuit protection | yes/ cyclic |
| Voltage drop at $I_e$ | ≤ 1.8 V |
| Wire breakage / Reverse polarity protection | yes/ complete |
| Output function | 3-wire, NO contact, PNP |
| Protective insulation | ⧈ |
| Switching frequency | 0.25 kHz |

| | |
|---|---|
| **Construction** | rectangular, CK40 |
| Dimensions | 65 x 40 x 40 mm |
| | variable orientation of active face in 5 directions |
| Housing material | plastic, PBT, black |
| Connection | male, M12 x 1 |
| Vibration resistance | 55 Hz (1 mm) |
| Shock resistance | 30 g (11 ms) |
| IP Rating | IP68 |
| MTTF | 874 years acc. to SN 29500 (Ed. 99) 40 °C |

| | |
|---|---|
| **Power-on indication** | 2 LEDs green |
| Switching state | LED yellow |
| Included in delivery | Fixing clamp BS4-CK40 |

### Wiring diagram

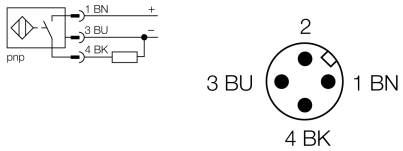


### Functional principle

Inductive sensors detect metal objects contactless and wear-free. *uprox*® Factor 1 sensors have significant advantages due to their patented ferrite-coreless multicoil system. They detect all metals at the same large switching distance and are resistant to magnetic fields.

Edition • 2015-07-27T15:37:33+02:00

# Inductive sensor
# NI25U-CK40-AP4X2-H1141

| | |
|---|---|
| **Distance D** | 120 mm |
| Distance W | 75 mm |
| Distance T | 140 mm |
| Distance S | 20 mm |
| Distance G | 150 mm |
| Distance N | 30 mm |
| **Width of the active face B** | 40 mm |

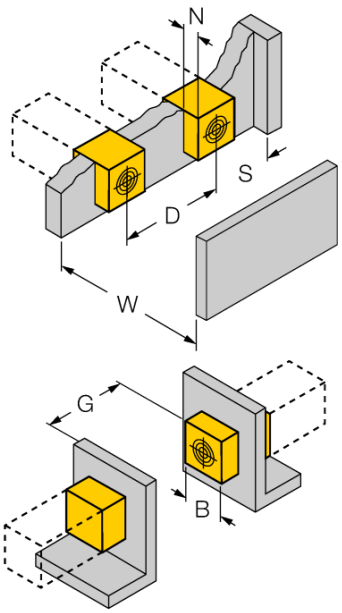


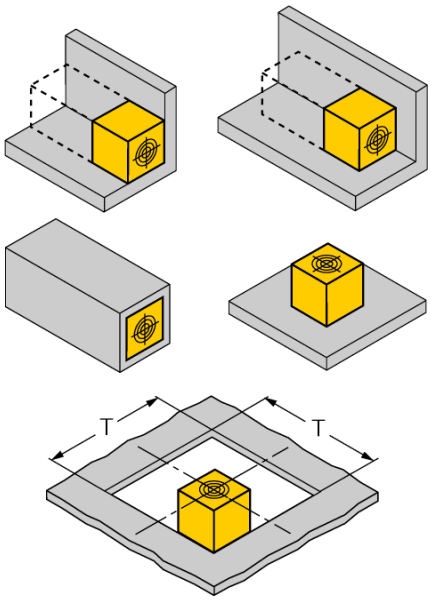


Flush mounting
1-side mounting: Sr = 22 mm
2-side mounting: Sr = 20 mm
3-side mounting: Sr = 17 mm

Backside mounting with full switching distance.

Recessed mounting with reduced switching distance.

The values stated relate to a 1 mm thick steel plate.

Edition • 2015-07-27T15:37:33+02:00


Hans Turck GmbH & Co.KG ● D-45472 Mülheim an der Ruhr ● Witzlebenstraße 7 ● Tel. 0208 4952-0 ● Fax 0208 4952-264 ● more@turck.com ● www.turck.com

## Accessories

| Type code | Ident no. | Description | Design |
|---|---|---|---|
| BSS-CP40 | 6901318 | Mounting bracket for rectangular devices; material: Polypropylene | 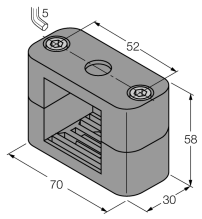 |



Edition • 2015-07-27T15:37:33+02:00