Magnetostrictive Linear Position Sensor
LTX125M-R10-Li0-X3-H1151

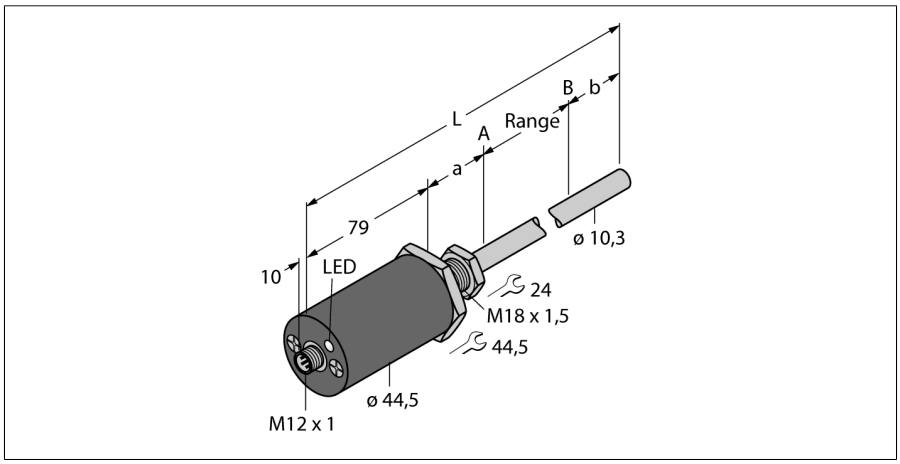

Type code	LTX125M-R10-Li0-X3-H1151
Ident no.	1540016
Measuring range [A…B]	125mm
Auflösung	16 bit
Blind zone a	50.8 mm
Blind zone b	63.5 mm
Repeatability	≤ 0.01 % of full scale
Linearity deviation	≤ 0.01 %
Hysteresis	≤ 0.025 mm
Ambient temperature	-40…+105 °C
Operating voltage	7…30VDC
Residual ripple	≤ 10 % U_{ss}
Short-circuit protection	yes/ cyclic
Output function	5-pin, analog output
Current output	4…20mA
Load resistance, current output	≤ 0.5 kΩ
Current consumption	40 mA at 24 VDC, typ.
Construction	cylindrical/smooth, R10
Housing material	metal, AL, black
Material active area	metal, VA
Connection	male, M12 x 1
Vibration resistance	30 Hz (1 mm)
Shock resistance	1000 g (11 ms)
IP Rating	IP68
Measuring range display	multifunction LED

- **Suited for hydraulic cylinders**
- **The sensor is pressure resistant up to 340 bar (permanent), 680 bar (short-term)**
- **Shock-proof up to 1000g**
- **Status displayed via 3-colour LED**
- **16 bit resolution**
- **adjustable measuring range**
- **Operating temperature rod -40°… +105°C**
- **Operating temperature electronics -40° …+85°C**
- **Protection class IP68**
- **7…30 V DC power supply**
- **Analog output 4…20 mA**
- **M12 x 1 connector**

Wiring diagram

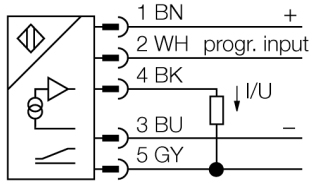

Functional principle

The LTX-R10 is a magneto-strictive sensor, optimized for precise position control in hydraulic cylinders. With the assistance of optional floats, the magnetically actuated position sensors also implement additional fill level monitoring.

The absolute value sensor is very robust and precise, and also saves the position information in the event of a voltage failure, so that additional zeroing is unnecessary. The sensors operate on the non-contact function principle and are thus wear and maintenance free.

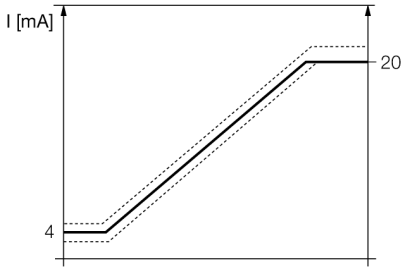

Edition • 2015-07-27T16:01:49+02:00

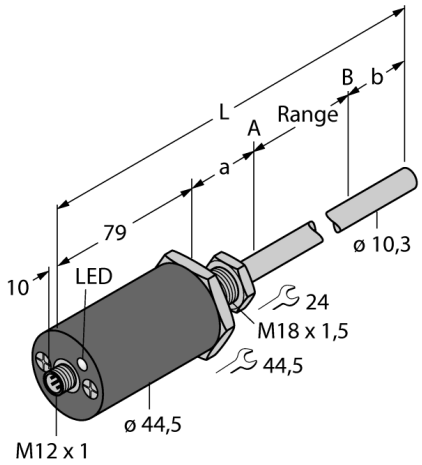

Programming:

Place the magnet on the desired start point.
Bridge Pin 2 (Program Input) and Pin 3 (Gnd) for 4 s.
Interrupt the bridge for 1 s. Bridge Pin 2 (Program Input) and Pin 3 (Gnd) again within the next 5 s. You have successfully programmed the start position.
Place the magnet on the desired end point.
Bridge Pin 2 (Program Input) and Pin 3 (Gnd) for 4 s.
Interrupt the bridge for 1 s. Bridge Pin 2 (Program Input) and Pin 1 (+) again within the next 5 s. You have successfully programmed the end position.

Edition • 2015-07-27T16:01:49+02:00

Accessories

Type code	Ident no.	Description	Design
CM-R10	6900416	standard cylinder magnet	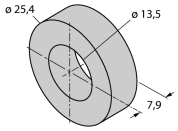
STS-R10	6900411	Standard spacer disc It consists of non-ferritic metal and is used to separate the positioning magnet from the head piece of the hydraulic piston rod.	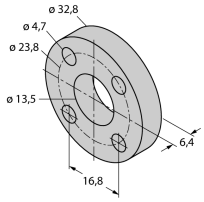
STM-AL-R10	6900409	standard 4-hole magnet, aluminium	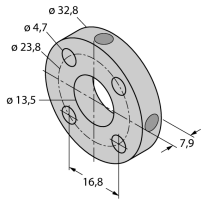
SPM-AL-R10	6900412	Small ring magnet with slot, aluminium	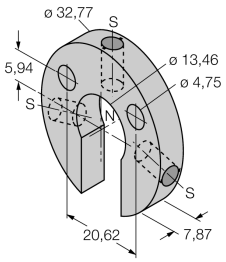
SPS-R10	6900413	spacer disk for ring magnet with slot	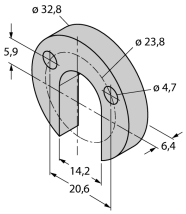

Edition • 2015-07-27T16:01:49+02:00

Accessories

Type code	Ident no.	Description	Design
EF-R10	6900417	Float magnet, stainless steel, specific weigth 0.62	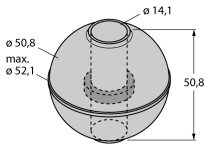
MF-R10	6900418	Small float, stainless steel, specific weigth 0.66	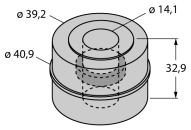
MB-R10	6900419	Fixing clamp sensor head + rod	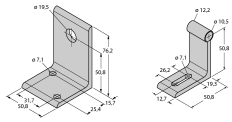
MMB-R10	6900004	Magnetic mounting bracket	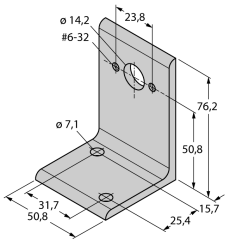

Edition • 2015-07-27T16:01:49+02:00