Inductive sensor
NI20-CK40-VP4X2-H1141

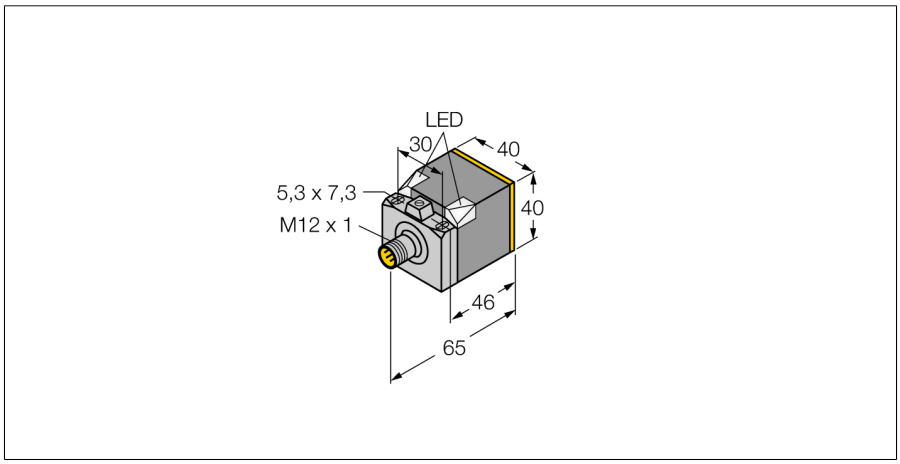

- **Rectangular, height 40 mm**
- **Variable orientation of active face in 5 directions**
- **Plastic, PBT-GF30-V0**
- **High luminance corner LEDs**
- **Optimum view on supply voltage and switching state from any position**
- **DC 4-wire, 10…65 VDC**
- **Changeover contact, PNP output**
- **M12 x 1 male connector**

Wiring diagram

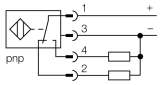

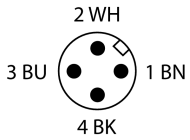

Functional principle

Inductive sensors detect metal objects contactless and wear-free. For this, they use a high-frequency electromagnetic AC field that interacts with the target. Inductive sensors generate this field via an RLC circuit with a ferrite coil.

Type code	NI20-CK40-VP4X2-H1141
Ident no.	15502
Rated switching distance Sn	20 mm
Mounting conditions	non-flush
Assured switching distance	≤ (0,81 x Sn) mm
Correction factors	St37 = 1; Al = 0.3; stainless steel = 0.7; Ms = 0.4
Repeatability	≤ 2 % of full scale
Temperature drift	≤ ± 10 %
Hysteresis	3…15 %
Ambient temperature	-25…+70 °C
Operating voltage	10…65VDC
Residual ripple	≤ 10 % U_{ss}
DC rated operational current	≤ 200 mA
No-load current I_0	≤ 15 mA
Residual current	≤ 0.1 mA
Rated insulation voltage	≤ 0.5 kV
Short-circuit protection	yes
Voltage drop at I_e	≤ 1.8 V
Wire breakage / Reverse polarity protection	yes/ complete
Output function	4-wire, changover contact, PNP
Switching frequency	0.15 kHz
Construction	rectangular, CK40
Dimensions	65 x 40 x 40 mm
	variable orientation of active face in 5 directions
Housing material	plastic, PBT, black
Connection	male, M12 x 1
Vibration resistance	55 Hz (1 mm)
Shock resistance	30 g (11 ms)
IP Rating	IP67
MTTF	2283 years acc. to SN 29500 (Ed. 99) 40 °C
Power-on indication	2 LEDs green
Switching state	LED yellow
Included in delivery	BS1-CK40

Edition • 2015-07-27T17:07:06+02:00

Distance W	3 x Sn
Distance S	1.5 x B
Distance G	6 x Sn
Distance N	0.5 x B
Width of the active face B	40 mm

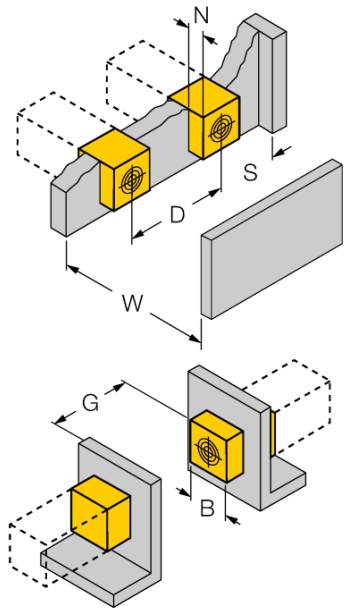

Edition • 2015-07-27T17:07:06+02:00

Accessories

Type code	Ident no.	Description	Design
BSS-CP40	6901318	Mounting bracket for rectangular devices; material: Polypropylene	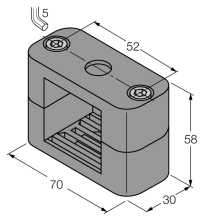

Edition • 2015-07-27T17:07:06+02:00