Inductive sensor
BI5U-EM18M-VP4X

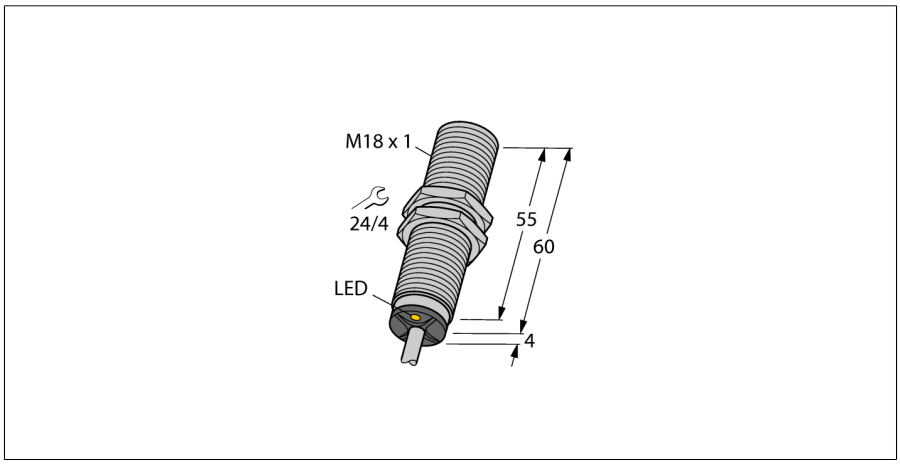

- **xxxx**
- **Threaded barrel, M18 x 1**
- **Stainless steel, 1.4301**
- **Factor 1 for all metals**
- **Protection class IP68**
- **Resistant to magnetic fields**
- **Extended temperature range**
- **High switching frequency**
- **DC 4-wire, 10…65 VDC**
- **Changeover contact, PNP output**
- **Cable connection**

Type code	BI5U-EM18M-VP4X
Ident no.	1581266
Rated switching distance Sn	5 mm
Mounting conditions	flush
Assured switching distance	≤ (0,81 x Sn) mm
Repeatability	≤ 2 % of full scale
Temperature drift	≤ ± 10 %
	≤ ± 15 %, ≤ -25 °C v ≥ +70 °C
Hysteresis	3…15 %
Ambient temperature	-30…+85 °C
Operating voltage	10…65VDC
Residual ripple	≤ 10 % U_{ss}
DC rated operational current	≤ 200 mA
No-load current I_0	≤ 15 mA
Residual current	≤ 0.1 mA
Rated insulation voltage	≤ 0.5 kV
Short-circuit protection	yes
Voltage drop at I_e	≤ 1.8 V
Wire breakage / Reverse polarity protection	yes/ complete
Output function	4-wire, changover contact, PNP
Protective insulation	⧈
Switching frequency	2.5 kHz
Construction	threaded barrel, M18 x 1
Dimensions	64 mm
Housing material	stainless steel, V2A (1.4301)
Material active area	plastic, PBT
End cap	Plastic, EPTR
Max. tightening torque housing nut	25 Nm
Connection	cable
Cable quality	5.2 mm, LifYY, PVC, 2m
Cable cross section	4 x 0.34 mm^2
Vibration resistance	55 Hz (1 mm)
Shock resistance	30 g (11 ms)
IP Rating	IP68
MTTF	874 years acc. to SN 29500 (Ed. 99) 40 °C
Switching state	LED yellow

Wiring diagram

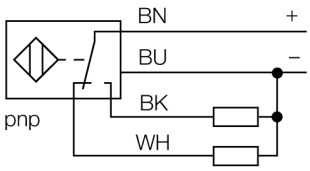

Functional principle

Inductive sensors detect metal objects contactless and wear-free. *uprox*® Factor 1 sensors have significant advantages due to their patented ferrite-coreless multicoil system. They detect all metals at the same large switching distance and are resistant to magnetic fields.

Edition • 2015-07-27T17:19:18+02:00

Distance D	2 x B
Distance W	3 x Sn
Distance T	3 x B
Distance S	1.5 x B
Distance G	6 x Sn

Diameter of the active area B	Ø 18 mm

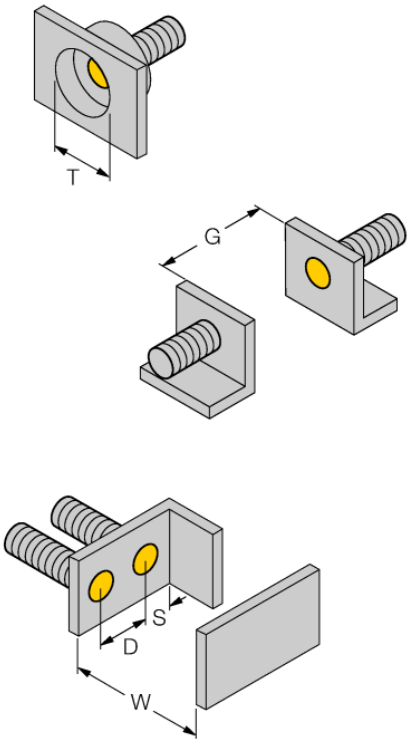

Edition • 2015-07-27T17:19:18+02:00

Accessories

Type code	Ident no.	Description	Design
MW-18	6945004	Mounting bracket for threaded barrel devices; material: Stainless steel A2 1.4301 (AISI 304)	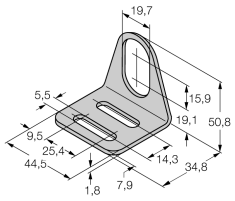
BSS-18	6901320	Mounting bracket for smooth and threaded barrel devices; material: Polypropylene	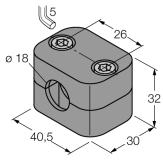

Edition • 2015-07-27T17:19:18+02:00