# Inductive sensor
# BI10U-EM30-VP4X-H1141

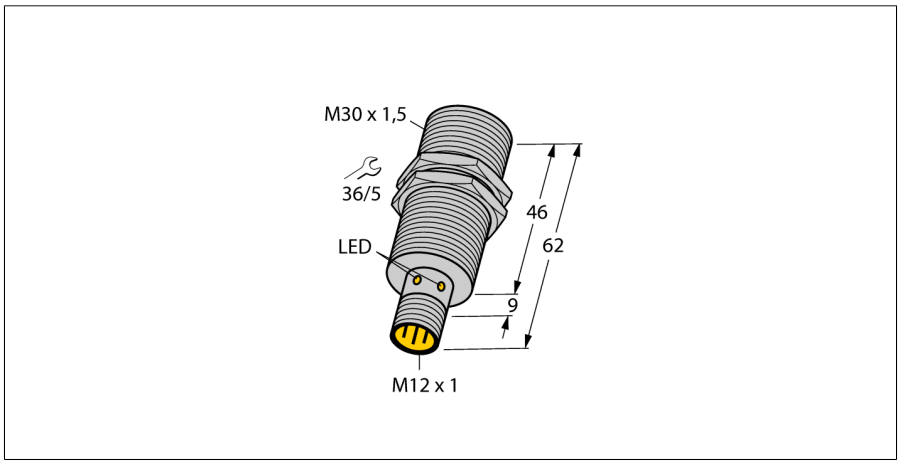


- **Threaded barrel, M30 x 1.5**
- **Stainless steel, 1.4301**
- **Factor 1 for all metals**
- **Protection class IP68**
- **Resistant to magnetic fields**
- **Extended temperature range**
- **High switching frequency**
- **4-wire DC, 10…65 VDC**
- **Changeover contact, PNP output**
- **Male M12 x 1**

### Wiring diagram

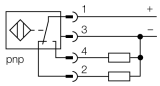


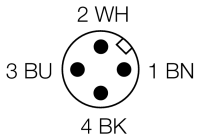


| | |
|---|---|
| **Type code** | BI10U-EM30-VP4X-H1141 |
| Ident no. | 1582263 |
| **Rated operating distance Sn** | 10 mm |
| Mounting condition | flush |
| Assured sensing range | ≤ (0,81 x Sn) mm |
| Repeatability | ≤ 2 % of full scale |
| Temperaturdrift | 10 % |
| | ≤ ± 15 %, ≤ -25 °C v ≥ +70 °C |
| Hysteresis | 3…15 % |
| Ambient temperature | -30…+85 °C |
| **Operating voltage** | 10…65VDC |
| Residual ripple | ≤ 10 % $U_{ss}$ |
| DC rated operational current | ≤ 200 mA |
| No-load current $I_0$ | ≤ 15 mA |
| Residual current | ≤ 0.1 mA |
| Rated insulation voltage | ≤ 0.5 kV |
| Short-circuit protection | yes |
| Voltage drop at $I_e$ | ≤ 1.8 V |
| Wire breakage / Reverse polarity protection | yes/ complete |
| Output function | 4-wire, changover contact, PNP |
| Protection class | ⧈ |
| Switching frequency | 2 kHz |
| **Design** | threaded barrel, M30 x 1.5 |
| Dimensions | 62 mm |
| Housing material | stainless steel, V2A (1.4301) |
| Material active face | Plastic, PBT |
| Max. tightening torque housing nut | 75 Nm |
| Connection | male, M12 x 1 |
| Vibration resistance | 55 Hz (1 mm) |
| Shock resistance | 30 g (11 ms) |
| Protection class | IP68 |
| MTTF | 874 years acc. to SN 29500 (Ed. 99) 40 °C |
| **Switching state** | LED yellow |

### Functional principle

Inductive sensors detect metal objects contactless and wear-free. Due to the patented multicoil system, *uprox*®+ sensors have distinct advantages over conventional sensors. They detect all metals at the same large switching distance and are resistant to magnetic fields.

Edition • 2013-12-21T05:10:57+01:00


Hans Turck GmbH & Co.KG ● D-45472 Mülheim an der Ruhr ● Witzlebenstraße 7 ● Tel. 0208 4952-0 ● Fax 0208 4952-264 ● more@turck.com ● www.turck.com

| | |
|---|---|
| **Distance D** | 2 x B |
| Distance W | 3 x Sn |
| Distance T | 3 x B |
| Distance S | 1.5 x B |
| Distance G | 6 x Sn |

| | |
|---|---|
| **Diameter of the active area B** | Ø 30 mm |

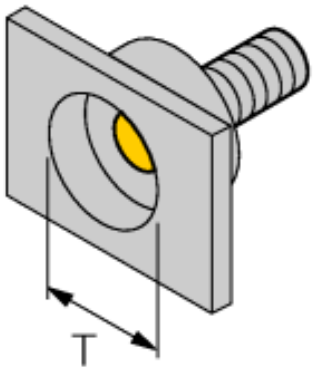


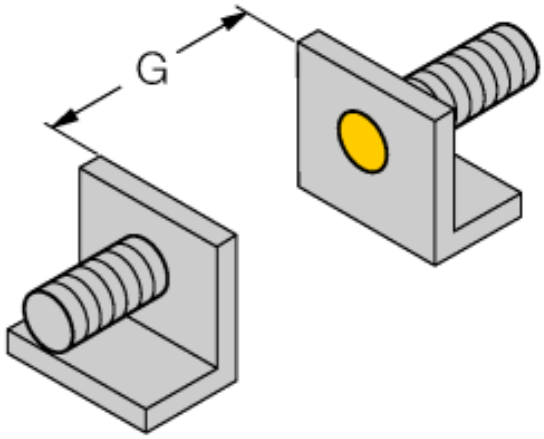


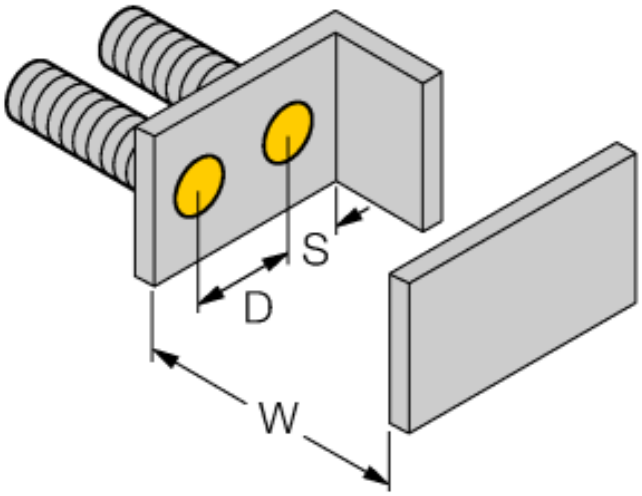


Edition • 2013-12-21T05:10:57+01:00

## Accessories

| Type code | Ident no. | Description | Dimension drawing |
|---|---|---|---|
| MW-30 | 6945005 | Mounting bracket for threaded barrel devices; material: Stainless steel A2 1.4301 (AISI 304) | 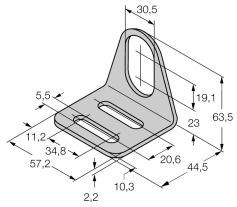  |
| BSS-30 | 6901319 | Mounting bracket for smooth and threaded barrel devices; material: Polypropylene | 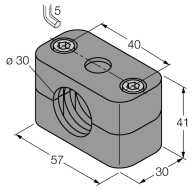  |

Edition • 2013-12-21T05:10:57+01:00