Inductive sensor
With increased switching distance
BI20-CP40-AP6X2

Industrial Automation

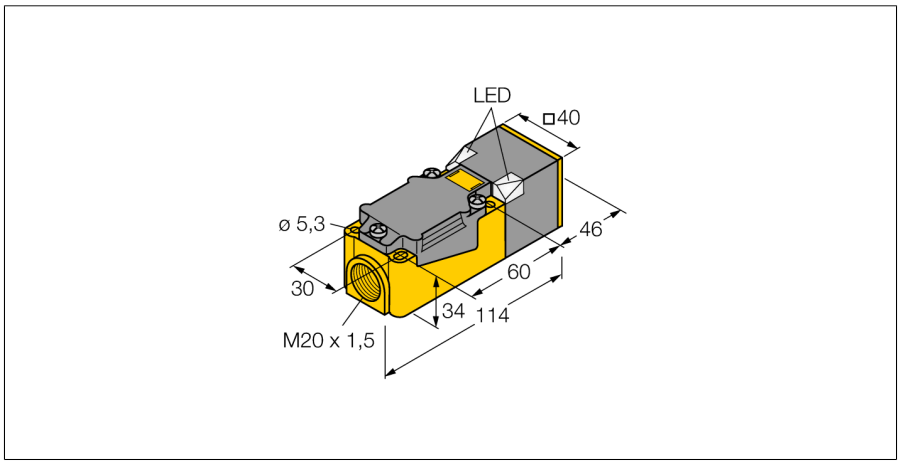

- **Rectangular, height 40 mm**
- **Variable orientation of active face in 9 directions**
- **Plastic, PBT-GF30-V0**
- **High luminance corner LEDs**
- **Optimum view on supply voltage and switching state from any position**
- **Large sensing range**
- **DC 3-wire, 10…30 VDC**
- **NO contact, PNP output**
- **Terminal chamber**

Wiring diagram

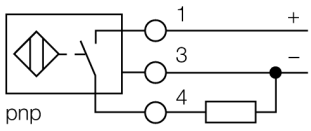

Functional principle

Inductive sensors detect metal objects contactless and wear-free. For this, they use a high-frequency electromagnetic AC field that interacts with the target. Inductive sensors generate this field via an RLC circuit with a ferrite coil.

Type code	BI20-CP40-AP6X2
Ident no.	1602100
Rated switching distance Sn	20 mm
Mounting conditions	flush
Assured switching distance	≤ (0,81 x Sn) mm
Correction factors	St37 = 1; Al = 0.3; stainless steel = 0.7; Ms = 0.4
Repeatability	≤ 2 % of full scale
Temperature drift	≤ ± 10 %
Hysteresis	3…15 %
Ambient temperature	-25…+70 °C
Operating voltage	10…30VDC
Residual ripple	≤ 10 % U_{ss}
DC rated operational current	≤ 200 mA
No-load current I_0	≤ 15 mA
Residual current	≤ 0.1 mA
Rated insulation voltage	≤ 0.5 kV
Short-circuit protection	yes/ cyclic
Voltage drop at I_e	≤ 1.8 V
Wire breakage / Reverse polarity protection	yes/ complete
Output function	3-wire, NO contact, PNP
Switching frequency	0.15 kHz
Construction	rectangular, CP40
Dimensions	114 x 40 x 40 mm
Housing material	plastic, PBT, black
Connection	Terminal chamber
Clamping ability	≤ 2.5 mm²
Vibration resistance	55 Hz (1 mm)
Shock resistance	30 g (11 ms)
IP Rating	IP67
MTTF	2283 years acc. to SN 29500 (Ed. 99) 40 °C
Power-on indication	2 LEDs green
Switching state	LED yellow

Edition • 2015-07-27T17:58:30+02:00

Hans Turck GmbH & Co.KG ● D-45472 Mülheim an der Ruhr ● Witzlebenstraße 7 ● Tel. 0208 4952-0 ● Fax 0208 4952-264 ● more@turck.com ● www.turck.com

Inductive sensor
With increased switching distance
BI20-CP40-AP6X2

Distance D	2 x B
Distance W	3 x Sn
Distance S	1 x B
Distance G	6 x Sn

Width of the active face B	40 mm

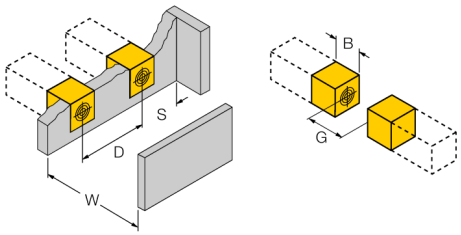

Edition • 2015-07-27T17:58:30+02:00

Hans Turck GmbH & Co.KG ● D-45472 Mülheim an der Ruhr ● Witzlebenstraße 7 ● Tel. 0208 4952-0 ● Fax 0208 4952-264 ● more@turck.com ● www.turck.com

Accessories

Type code	Ident no.	Description	Design
STRM M20X1,5 BLACK	6965902	Cable glands M20 x 1.5	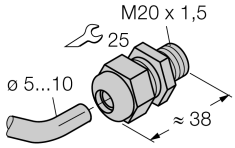
Adjusting bar JS 025/037	69429	Adjusting bar for rectangular housings CK/CP40; material: VA 1.4301	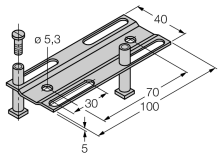
BSS-CP40	6901318	Mounting bracket for rectangular devices; material: Polypropylene	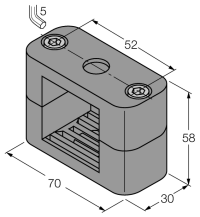

Edition • 2015-07-27T17:58:30+02:00