Inductive sensor
BI2-Q10S-AP6X-0,2-PSG3M

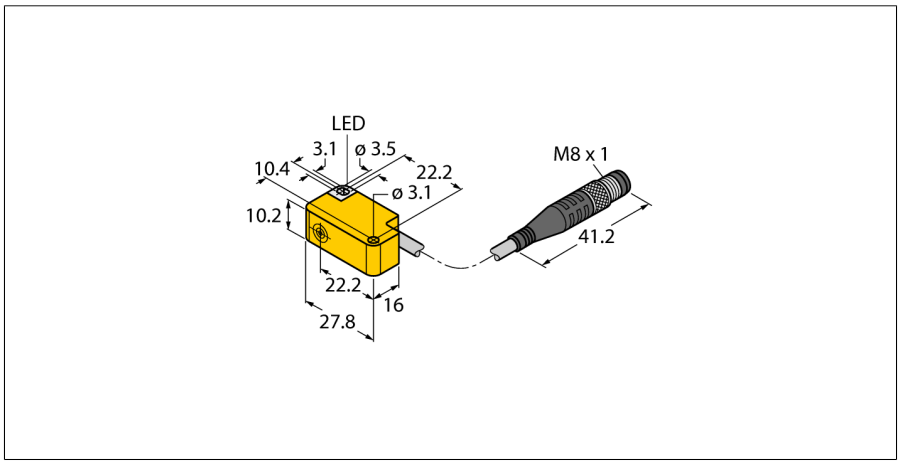

- **Rectangular, height 10.2 mm**
- **Active face, lateral**
- **Cable outlet to all sides**
- **Plastic, PP-GF20**
- **DC 3-wire, 10…30 VDC**
- **NO contact, PNP output**
- **M8 x 1 male connector**

Wiring Diagram

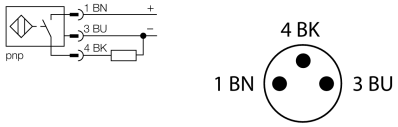

Type code	BI2-Q10S-AP6X-0,2-PSG3M
Ident no.	1609303
Rated switching distance Sn	2 mm
Mounting conditions	flush
Assured switching distance	≤ (0,81 x Sn) mm
Correction factors	St37 = 1; Al = 0.3; stainless steel = 0.7; Ms = 0.4
Repeatability	≤ 2 % of full scale
Temperature drift	≤ ± 10 %
Hysteresis	3…15 %
Operating voltage	10… 30VDC
Residual ripple	≤ 10 % U_{ss}
DC rated operational current	≤ 150 mA
No-load current I_0	≤ 15 mA
Residual current	≤ 0.1 mA
Rated insulation voltage	≤ 0.5 kV
Short-circuit protection	yes/ cyclic
Voltage drop at I_e	≤ 1.8 V
Wire breakage / Reverse polarity protection	yes/ complete
Output function	3-wire, NO contact, PNP
Switching frequency	2 kHz
Construction	rectangular, Q10S
Dimensions	27.8 x 16 x 10.2 mm
Housing material	plastic, PP
Material coupling nut	metal, CuZn, nickel-plated
Connection	flange connector, M8 x 1
Cable quality	3 mm, grey, Lif9Y-11Y, PUR, 0.2m Suited for E-ChainSystems® acc. to manufacturers declaration H1063M
Cable cross section	3 x 0.14 mm²
Vibration resistance	55 Hz (1 mm)
Shock resistance	30 g (11 ms)
Protection class	IP67
MTTF	2283 years acc. to SN 29500 (Ed. 99) 40 °C
Switching state	LED yellow

Functional principle

Inductive sensors detect metal objects contactless and wear-free. For this, they use a high-frequency electromagnetic AC field that interacts with the target. Inductive sensors generate this field via an RLC circuit with a ferrite coil.

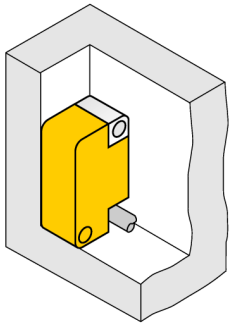

Edition • 2016-02-12T11:26:10+01:00

Distance D	2 x B
Distance W	3 x Sn
Distance S	1 x B
Distance G	6 x Sn

Width of the active face B	10.2 mm

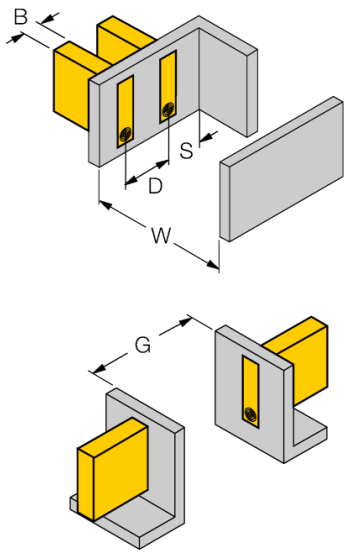

Edition • 2016-02-12T11:26:10+01:00