Inductive sensor
NI5U-Q10S-AP6X-0,3-PSG3M

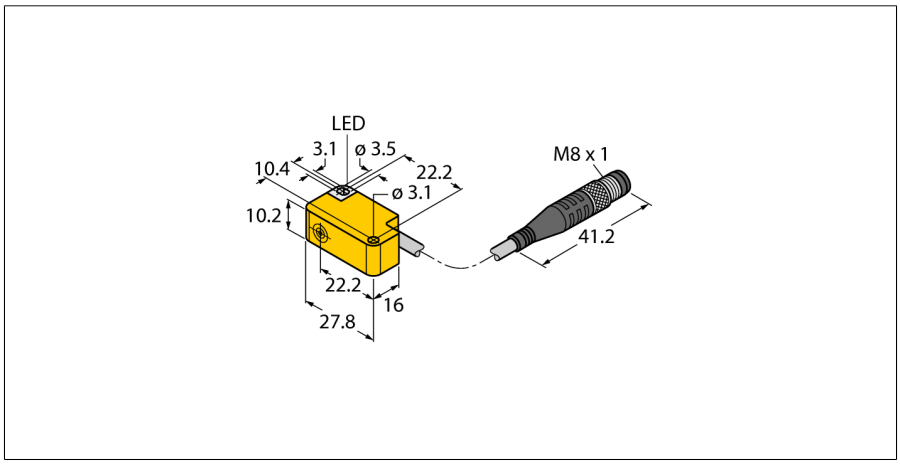

- **Rectangular, height 10.2 mm**
- **Active face, lateral**
- **Cable outlet to all sides**
- **Plastic, PP-GF20**
- **Factor 1 for all metals**
- **Increased switching distance**
- **Protection class IP68**
- **Resistant to magnetic fields**
- **Auto-compensation protects against pre-attenuation**
- **Flush mounted installation on up to 4 sides**
- **DC 3-wire, 10…30 VDC**
- **NO contact, PNP output**
- **Pigtail with male end M8 x 1**

Type code	NI5U-Q10S-AP6X-0,3-PSG3M
Ident no.	1609366

Rated switching distance Sn	5 mm
Mounting conditions	non-flush
Assured switching distance	≤ (0,81 x Sn) mm
Repeatability	≤ 2 % of full scale
Temperature drift	≤ ± 10 %
	≤ ± 15 %, ≤ -25 °C v ≥ +70 °C
Hysteresis	3…15 %
Ambient temperature	-30…+85 °C

Operating voltage	10… 30VDC
Residual ripple	≤ 10 % U_{ss}
DC rated operational current	≤ 150 mA
No-load current I_0	≤ 15 mA
Residual current	≤ 0.1 mA
Rated insulation voltage	≤ 0.5 kV
Short-circuit protection	yes/ cyclic
Voltage drop at I_e	≤ 1.8 V
Wire breakage / Reverse polarity protection	yes/ complete
Output function	3-wire, NO contact, PNP
Switching frequency	1 kHz

Construction	rectangular, Q10S
Dimensions	27.8 x 16 x 10.2 mm
Housing material	plastic, PP
Material coupling nut	metal, CuZn, nickel-plated
Connection	cable with connector, M8 x 1
Cable quality	3 mm, grey, Lif9Y-11Y, PUR, 0.3m
	Suited for E-ChainSystems® acc. to manufacturers declaration H1063M
Cable cross section	3 x 0.14 mm²
Vibration resistance	55 Hz (1 mm)
Shock resistance	30 g (11 ms)
Protection class	IP68
MTTF	874 years acc. to SN 29500 (Ed. 99) 40 °C

Switching state	LED yellow

Wiring Diagram

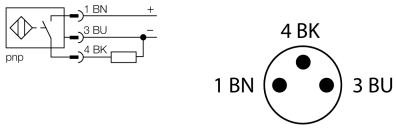

Functional principle

Inductive sensors detect metal objects contactless and wear-free. Due to the patented multi-coil system, *uprox*®+ sensors have distinct advantages over conventional sensors. They excel in largest switching distances, maximum flexibility and operational reliability as well as efficient standardization.

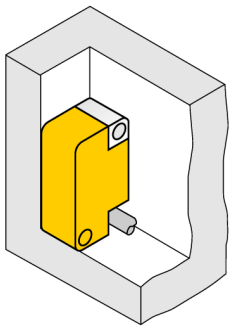

Edition • 2016-02-12T11:26:37+01:00

Distance D	3 x B
Distance W	3 x Sn
Distance S	1.5 x B
Distance G	6 x Sn

Width of the active face B	10.2 mm

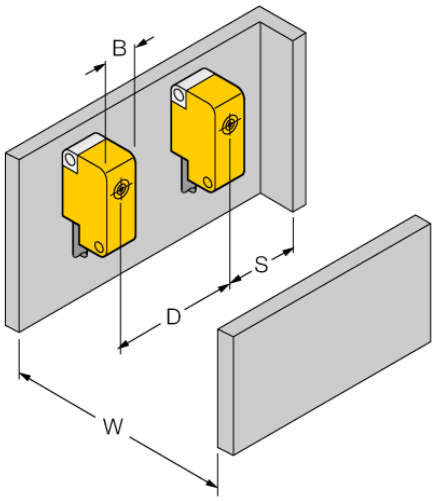

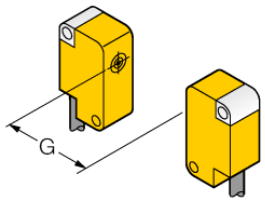

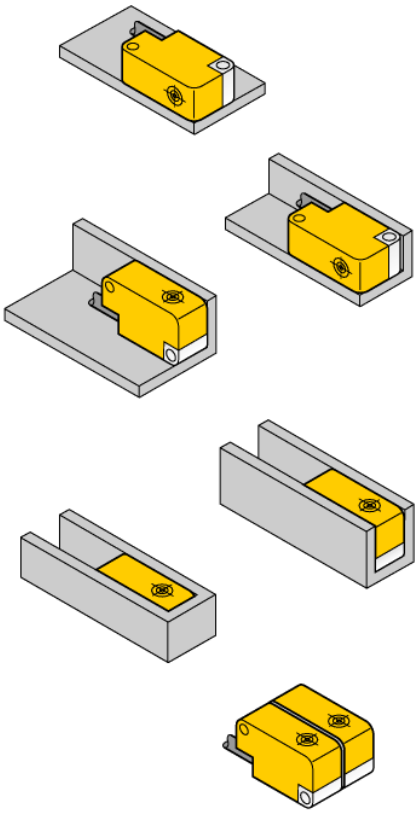

Flush mounting:

1-side mounting:
Sn = 3 mm

2-side mounting:
Sn = 3 mm

3-side mounting:
Sn = 2.6 mm

4-side mounting:
Sn = 2.3 mm

In many cases, sensors have to be mounted side by side to fulfill monitoring tasks. In order to avoid mutual interferences, use the Q10S-ZP shield (ident no. 6900520).

Edition • 2016-02-12T11:26:37+01:00

Accessories

Type code	Ident no.	Description	Design
Q10S-ZP	6900520	Q10S shield	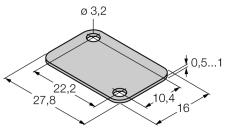

Edition • 2016-02-12T11:26:37+01:00

Hans Turck GmbH & Co.KG ● D-45472 Mülheim an der Ruhr ● Witzlebenstraße 7 ● Tel. 0208 4952-0 ● Fax 0208 4952-264 ● more@turck.com ● www.turck.com