Inductive sensor
Resistant to magnetic fields
BI2-Q5,5-AP6X-0,6-PSG3S/S34

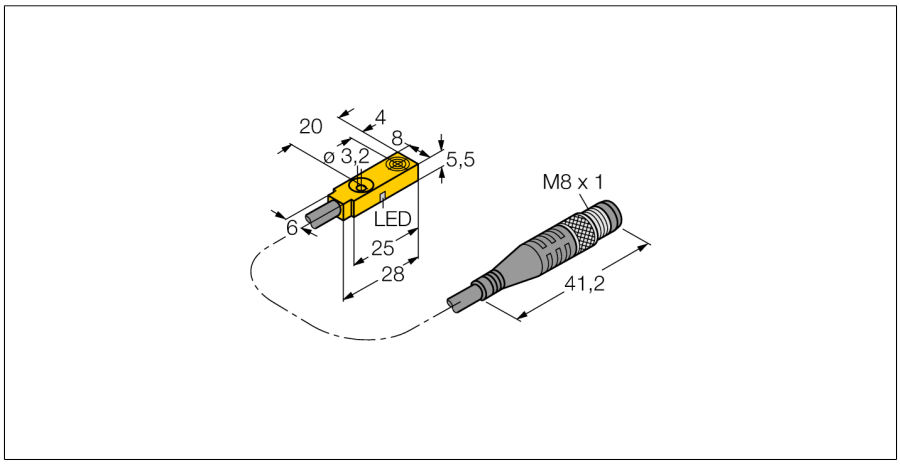

- **Rectangular, height 5.5 mm**
- **Active face on top**
- **Plastic, PP**
- **Resistant to magnetic fields (weld resistant), for DC and AC fields**
- **DC 3-wire, 10…30 VDC**
- **NO contact, PNP output**
- **Cable connection**

Type code	BI2-Q5,5-AP6X-0,6-PSG3S/S34
Ident no.	1613018
Mounting conditions	flush
Assured switching distance	≤ (0,81 x Sn) mm
Correction factors	St37 = 1; Al = 0.3; stainless steel = 0.7; Ms = 0.4
Repeatability	≤ 2 % of full scale
Temperature drift	≤ ± 10 %
Hysteresis	3…15 %
Ambient temperature	-25…+70 °C
Operating voltage	10…30VDC
Residual ripple	≤ 10 % U_{ss}
DC rated operational current	≤ 150 mA
No-load current I_0	≤ 15 mA
Residual current	≤ 0.1 mA
Rated insulation voltage	≤ 0.5 kV
Short-circuit protection	yes/ cyclic
Voltage drop at I_e	≤ 1.8 V
Wire breakage / Reverse polarity protection	yes/ complete
Output function	3-wire, NO contact, PNP
Construction	rectangular, Q5.5
Dimensions	28 x 8 x 5.5 mm
Housing material	plastic, PP
Material coupling nut	metal, CuZn, nickel-plated
Tightening torque fixing screw	0.5 Nm
Connection	cable
Cable quality	3 mm, grey, LIF2X11XFHF, TPU, 0.6m Flame retardant acc. to VDE 0472, part 804B
Cable cross section	3 x 0.14 mm²
Vibration resistance	55 Hz (1 mm)
Shock resistance	30 g (11 ms)
IP Rating	IP67
MTTF	2283 years acc. to SN 29500 (Ed. 99) 40 °C
Switching state	LED yellow

Wiring diagram

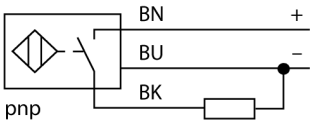

Functional principle

Inductive sensors detect metal objects contactless and wear-free. For this purpose they use a high-frequency electromagnetic AC field that interacts with the target. The sensors hosting a ferrite core coil generate the AC field through an LC resonant circuit. Magnetic field sensors incorporate a special ferrite core making them immune to magnetic AC and DC fields. Hence, they can be applied in welding systems.

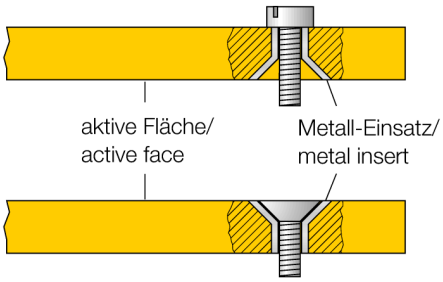

Edition • 2015-07-27T18:11:41+02:00

Inductive sensor
Resistant to magnetic fields
BI2-Q5,5-AP6X-0,6-PSG3S/S34

Distance D	2 x B
Distance W	3 x Sn
Distance S	1 x B
Distance G	6 x Sn

Width of the active face B	8 mm

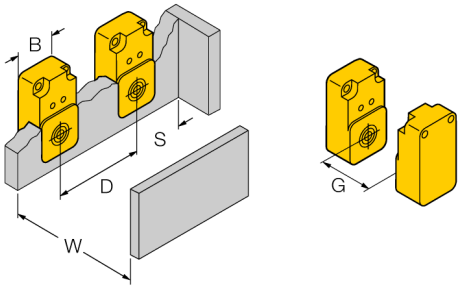

Edition • 2015-07-27T18:11:41+02:00

Hans Turck GmbH & Co.KG ● D-45472 Mülheim an der Ruhr ● Witzlebenstraße 7 ● Tel. 0208 4952-0 ● Fax 0208 4952-264 ● more@turck.com ● www.turck.com