Inductive sensor
Bi2-Q5,5-AP6X-0,2-RS4

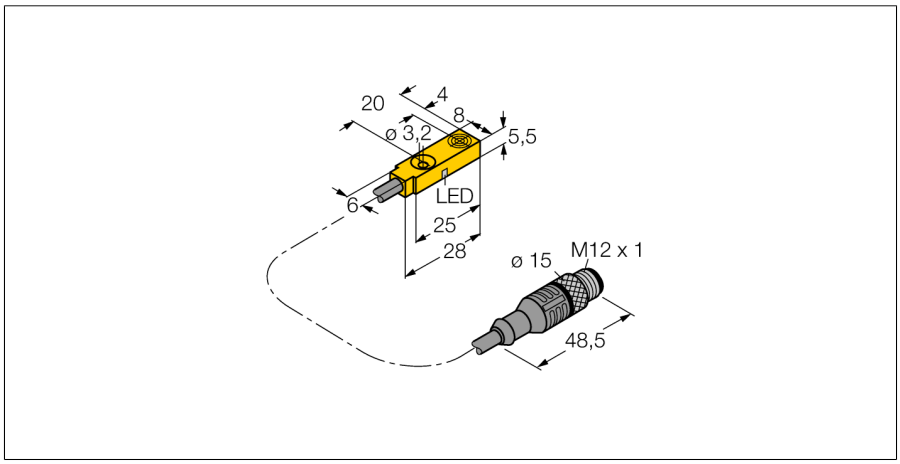

- **Rectangular, height 5.5 mm**
- **Active face on top**
- **Plastic, PP**
- **DC 3-wire, 10…30 VDC**
- **NO contact, PNP output**
- **Pigtail with male end M12 x 1**

Wiring diagram

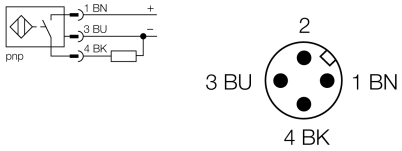

Type code	Bi2-Q5,5-AP6X-0,2-RS4
Ident no.	1613029
Rated switching distance Sn	2 mm
Mounting conditions	flush
Assured switching distance	≤ (0,81 x Sn) mm
Correction factors	St37 = 1; Al = 0.3; stainless steel = 0.7; Ms = 0.4
Repeatability	≤ 2 % of full scale
Temperature drift	≤ ± 10 %
Hysteresis	3…15 %
Ambient temperature	-25…+85 °C
Operating voltage	10…30VDC
Residual ripple	≤ 10 % U_{ss}
DC rated operational current	≤ 150 mA
No-load current I_0	≤ 15 mA
Residual current	≤ 0.1 mA
Rated insulation voltage	≤ 0.5 kV
Short-circuit protection	yes/ cyclic
Voltage drop at I_e	≤ 1.8 V
Wire breakage / Reverse polarity protection	yes/ complete
Output function	3-wire, NO contact, PNP
Switching frequency	2 kHz
Construction	rectangular, Q5.5
Dimensions	28 x 8 x 5.5 mm
Housing material	plastic, PP
Tightening torque fixing screw	0.5 Nm
Connection	Cable with male end, M12 x 1
Cable quality	3 mm, grey, Lif9Y-11Y, PUR, 0.2m Suited for E-ChainSystems® acc. to manufacturers declaration H1063M
Cable cross section	3 x 0.14 mm^2
Vibration resistance	55 Hz (1 mm)
Shock resistance	30 g (11 ms)
IP Rating	IP67
MTTF	2283 years acc. to SN 29500 (Ed. 99) 40 °C
Switching state	LED yellow

Functional principle

Inductive sensors detect metal objects contactless and wear-free. For this, they use a high-frequency electromagnetic AC field that interacts with the target. Inductive sensors generate this field via an RLC circuit with a ferrite coil.

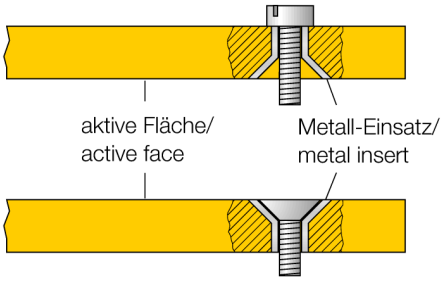

Edition • 2015-07-27T18:12:07+02:00

Inductive sensor
Bi2-Q5,5-AP6X-0,2-RS4

Distance D	2 x B
Distance W	3 x Sn
Distance S	1 x B
Distance G	6 x Sn

Width of the active face B	8 mm

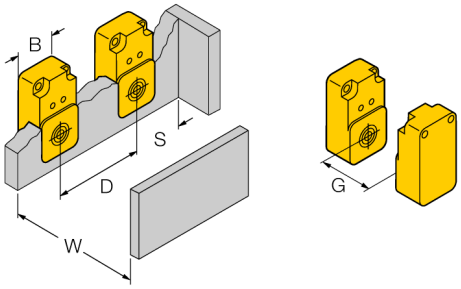

Edition • 2015-07-27T18:12:07+02:00

Hans Turck GmbH & Co.KG ● D-45472 Mülheim an der Ruhr ● Witzlebenstraße 7 ● Tel. 0208 4952-0 ● Fax 0208 4952-264 ● more@turck.com ● www.turck.com