Inductive sensor
With increased switching distance
NI75U-CP80-AP6X2

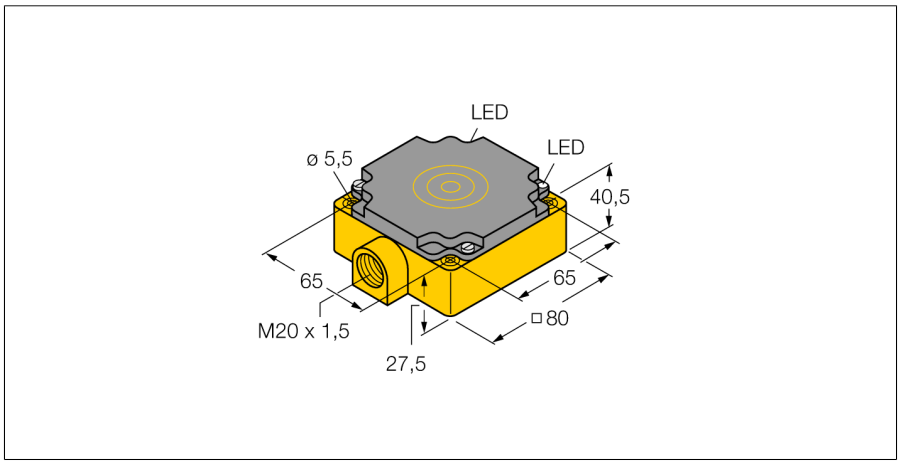

- **Rectangular, height 41 mm**
- **Plastic, PBT-GF30-V0**
- **Factor 1 for all metals**
- **Resistant to magnetic fields**
- **Large coverage**
- **Extended temperature range**
- **High switching frequency**
- **DC 3-wire, 10…30 VDC**
- **NO contact, PNP output**
- **Terminal chamber**

Wiring diagram

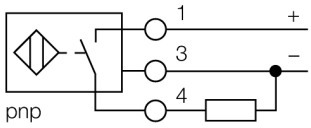

Type code	NI75U-CP80-AP6X2
Ident no.	1623800
Rated switching distance Sn	75 mm
Mounting conditions	non-flush
Assured switching distance	≤ (0,81 x Sn) mm
Repeatability	≤ 2 % of full scale
Temperature drift	≤ ± 10 %
	≤ ± 15 %, ≤ -25 °C v ≥ +70 °C
Hysteresis	3…15 %
Ambient temperature	-30…+85 °C
Operating voltage	10…30VDC
Residual ripple	≤ 10 % U_{ss}
DC rated operational current	≤ 200 mA
No-load current I_0	≤ 15 mA
Residual current	≤ 0.1 mA
Rated insulation voltage	≤ 0.5 kV
Short-circuit protection	yes/ cyclic
Voltage drop at I_e	≤ 1.8 V
Wire breakage / Reverse polarity protection	yes/ complete
Output function	3-wire, NO contact, PNP
Protective insulation	⧈
Switching frequency	0.25 kHz
Construction	rectangular, CP80
Dimensions	80 x 80 x 41 mm
Housing material	plastic, PBT
Connection	Terminal chamber
Clamping ability	≤ 2.5 mm²
Vibration resistance	55 Hz (1 mm)
Shock resistance	30 g (11 ms)
IP Rating	IP67
MTTF	874 years acc. to SN 29500 (Ed. 99) 40 °C
Power-on indication	LED green
Switching state	LED yellow

Functional principle

Inductive sensors detect metal objects contactless and wear-free. *uprox*® Factor 1 sensors have significant advantages due to their patented ferrite-coreless multicoil system. They detect all metals at the same large switching distance and are resistant to magnetic fields.

Edition • 2015-07-27T18:18:15+02:00

Inductive sensor
With increased switching distance
NI75U-CP80-AP6X2

Distance W	3 x Sn
Distance T	4 x Sn
Distance S	1.5 x B
Distance G	6 x Sn
Distance A	1 x B
Distance C	1 x B

Width of the active face B	80 mm

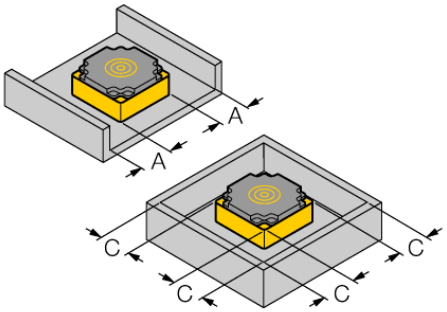

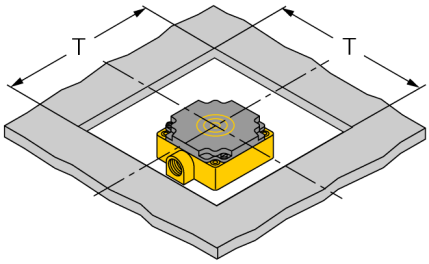

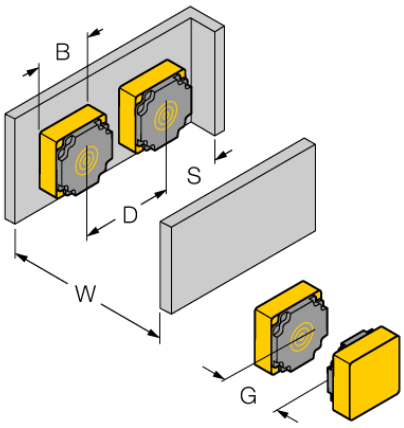

Edition • 2015-07-27T18:18:15+02:00

Hans Turck GmbH & Co.KG ● D-45472 Mülheim an der Ruhr ● Witzlebenstraße 7 ● Tel. 0208 4952-0 ● Fax 0208 4952-264 ● more@turck.com ● www.turck.com