Inductive sensor
With increased switching distance
BI20-CK40-AP6X2-H1141

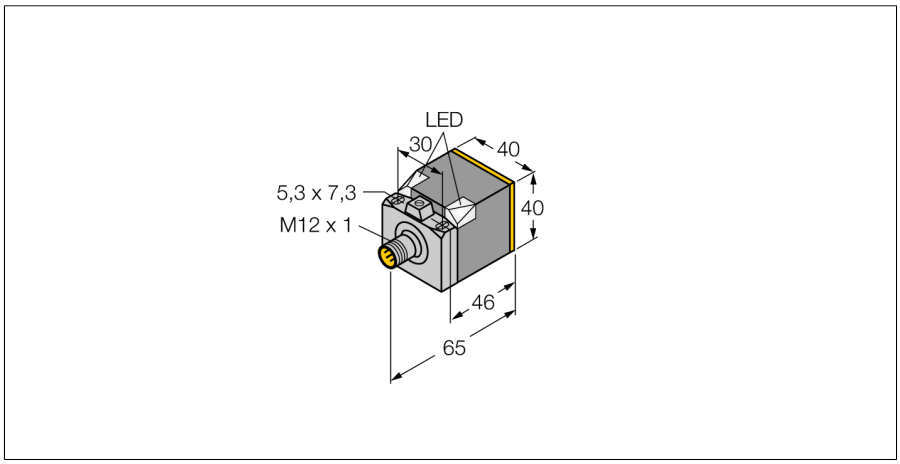

- **Rectangular, height 40 mm**
- **Variable orientation of active face in 5 directions**
- **Plastic, PBT-GF30-V0**
- **High luminance corner LEDs**
- **Optimum view on supply voltage and switching state from any position**
- **Large sensing range**
- **DC 3-wire, 10…30 VDC**
- **NO contact, PNP output**
- **M12 x 1 male connector**

Type code	BI20-CK40-AP6X2-H1141
Ident no.	1625500
Rated switching distance Sn	20 mm
Mounting conditions	flush
Assured switching distance	≤ (0,81 x Sn) mm
Correction factors	St37 = 1; Al = 0.3; stainless steel = 0.7; Ms = 0.4
Repeatability	≤ 2 % of full scale
Temperature drift	≤ ± 10 %
Hysteresis	3…15 %
Ambient temperature	-25…+70 °C
Operating voltage	10…30VDC
Residual ripple	≤ 10 % U_{ss}
DC rated operational current	≤ 200 mA
No-load current I_0	≤ 15 mA
Residual current	≤ 0.1 mA
Rated insulation voltage	≤ 0.5 kV
Short-circuit protection	yes/ cyclic
Voltage drop at I_e	≤ 1.8 V
Wire breakage / Reverse polarity protection	yes/ complete
Output function	3-wire, NO contact, PNP
Switching frequency	0.15 kHz
Construction	rectangular, CK40
Dimensions	65 x 40 x 40 mm
	variable orientation of active face in 5 directions
Housing material	plastic, PBT, black
Connection	male, M12 x 1
Vibration resistance	55 Hz (1 mm)
Shock resistance	30 g (11 ms)
IP Rating	IP67
MTTF	2283 years acc. to SN 29500 (Ed. 99) 40 °C
Power-on indication	2 LEDs green
Switching state	LED yellow
Included in delivery	BS1-CK40

Wiring diagram

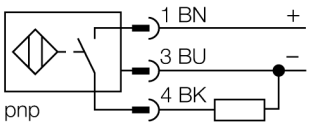

Functional principle

Inductive sensors detect metal objects contactless and wear-free. For this, they use a high-frequency electromagnetic AC field that interacts with the target. Inductive sensors generate this field via an RLC circuit with a ferrite coil.

Edition • 2015-07-27T18:19:01+02:00

Inductive sensor
With increased switching distance
BI20-CK40-AP6X2-H1141

Distance D	2 x B
Distance W	3 x Sn
Distance S	1 x B
Distance G	6 x Sn

Width of the active face B	40 mm

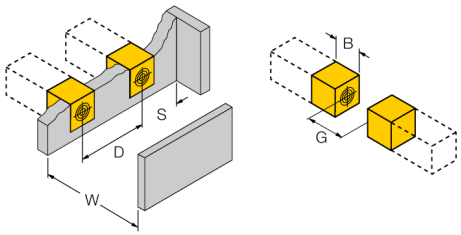

Edition • 2015-07-27T18:19:01+02:00

Accessories

Type code	Ident no.	Description	Design
BSS-CP40	6901318	Mounting bracket for rectangular devices; material: Polypropylene	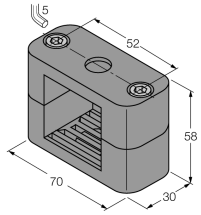

Wiring accessories

Type code	Ident no.	Description	Design
RKC4T-2/TEL	6625010	Connection cable, female M12, straight, 3-pin, cable length: 2 m, sheath material: PVC, black; cULus approval; other cable lengths and qualities available, see www.turck.com	

Edition • 2015-07-27T18:19:01+02:00