Inductive sensor
With low hysteresis
BI2U-S12-AP6X/S1132

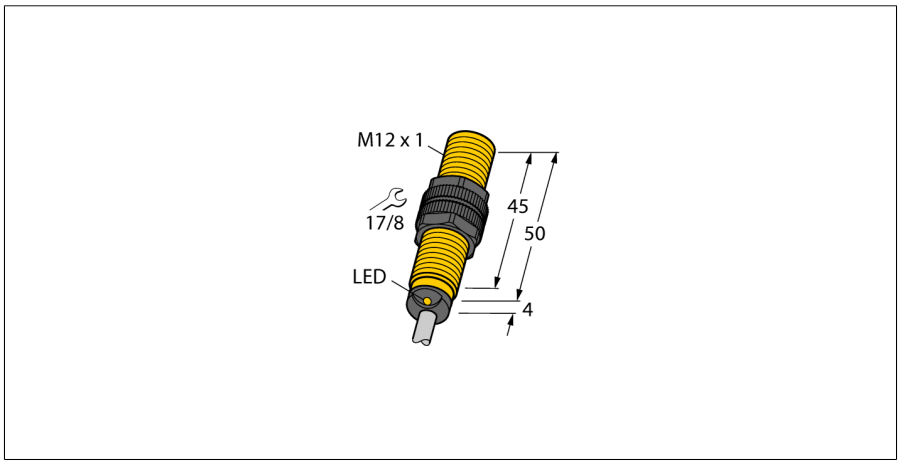

- **Threaded barrel, M12 x 1**
- **Plastic, PA6-GK15**
- **Factor 1 for all metals**
- **Protection class IP68**
- **Resistant to magnetic fields**
- **Large switching distance**
- **Recessed mountable**
- **Temperatures up to +100 °C**
- **Low hysteresis**
- **DC 3-wire, 10…30 VDC**
- **NO contact, PNP output**
- **Cable connection**

Type designation	BI2U-S12-AP6X/S1132
Ident no.	1634931
Rated switching distance Sn	2 mm
Mounting conditions	Flush
Secured operating distance	≤ (0,81 x Sn) mm
Repeat accuracy	≤ 2 % of full scale
Temperature drift	≤ ± 10 %
	≤ ± 20 %, ≤ -25 °C , ≥ +70 °C
Hysteresis	3…10 %
Hysteresis	0,06 .. 0,2 mm
Ambient temperature	-25…+100 °C
Operating voltage	10…30 VDC
Residual ripple	≤ 10 % U_{ss}
DC rated operational current	≤ 200 mA
Rated operational current	See derating curve
No-load current I_0	≤ 20 mA
Residual current	≤ 0.1 mA
Isolation test voltage	≤ 0.5 kV
Short-circuit protection	yes/ Cyclic
Voltage drop at I_e	≤ 1.8 V
Wire breakage/Reverse polarity protection	yes/ Complete
Output function	3-wire, NO contact, PNP
Switching frequency	3 kHz
Design	Threaded barrel, M12 × 1
Dimensions	54 mm
Housing material	Plastic, PA6-GK15
Active area material	Plastic, PA12-GF30
End cap	Plastic, EPTR
Max. tightening torque housing nut	1 Nm
Electrical connection	Cable
Cable quality	5.2 mm, LifYY-T105, PVC, 2m
Cable cross section	3 x 0.5 mm^2
Vibration resistance	55 Hz (1 mm)
Shock resistance	30 g (11 ms)
Protection class	IP68
MTTF	874 years acc. to SN 29500 (Ed. 99) 40 °C
Switching state	LED yellow

Wiring Diagram

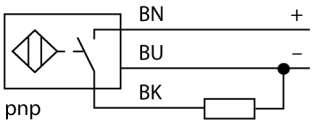

Functional principle

Inductive sensors detect metal objects contactless and wear-free. Due to the patented multi-coil system, *uprox*®+ sensors have distinct advantages over conventional sensors. They excel in largest switching distances, maximum flexibility and operational reliability as well as efficient standardization.

Derating Curve

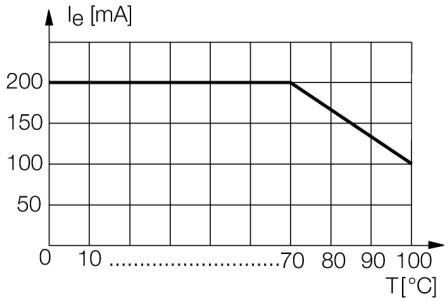

Edition • 2017-08-31T08:54:33+02:00

Distance D	2 x B
Distance W	3 x Sn
Distance T	3 x B
Distance S	1.5 x B
Distance G	6 x Sn

Diameter active area B	Ø 12 mm

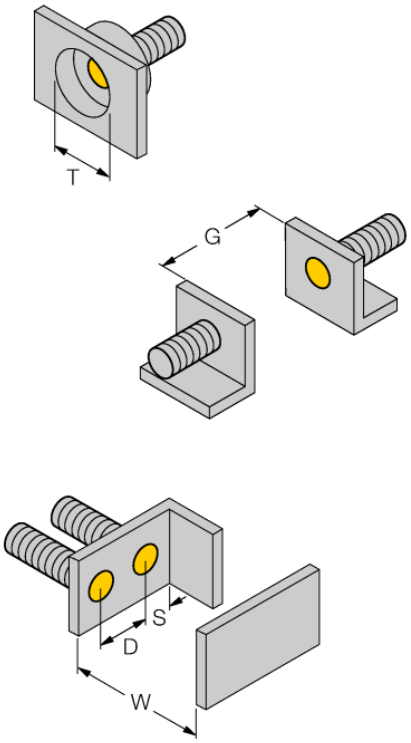

Edition • 2017-08-31T08:54:33+02:00

Accessories

Type code	Ident no.	Description	
QM-12	6945101	Quick-mount bracket with dead-stop; material: Chrome-plated brass Male thread M16 x 1. Note: The switching distance of proximity switches can be reduced by the use of quick-mount brackets.	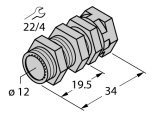
BST-12B	6947212	Fixing clamp for threaded barrel devices, with dead-stop; material: PA6	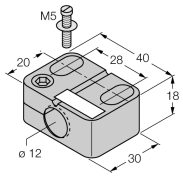
MW-12	6945003	Mounting bracket for threaded barrel devices; material: Stainless steel A2 1.4301 (AISI 304)	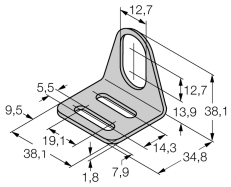
BSS-12	6901321	Mounting bracket for smooth and threaded barrel devices; material: Polypropylene	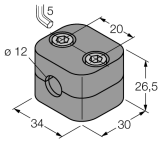
PN-M12	6905309	Impact protection nut for M12x1 threaded barrel devices; material: Stainless steel A2 1.4305 (AISI 303)	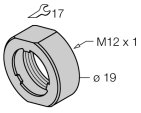

Edition • 2017-08-31T08:54:33+02:00