Inductive sensor
BI5U-M18EE-AP6X-H1141

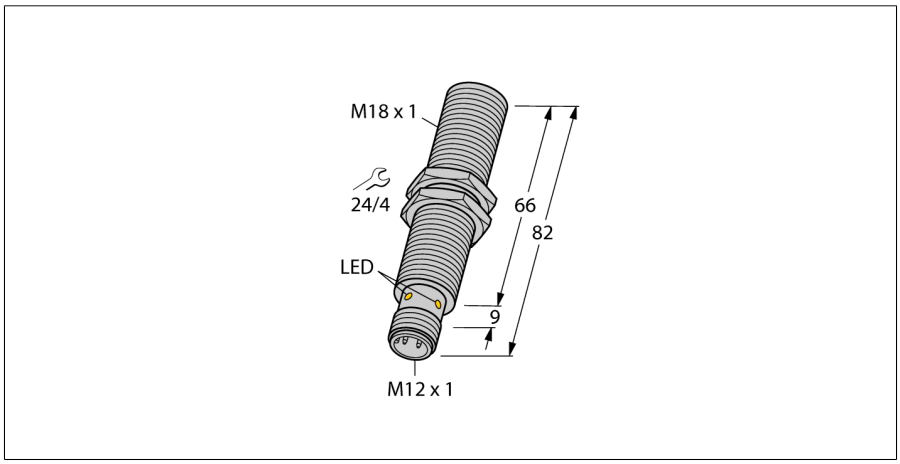

- **Threaded barrel, M18 x 1**
- **Chrome-plated brass**
- **Factor 1 for all metals**
- **Resistant to magnetic fields**
- **Extended temperature range**
- **High switching frequency**
- **3-wire DC, 10…30 VDC**
- **NO contact, PNP output**
- **Male M12 x 1**

Wiring diagram

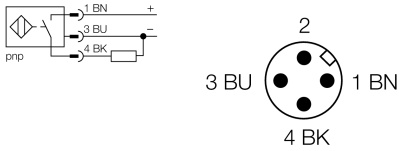

Functional principle

Inductive sensors detect metal objects contactless and wear-free. Due to the patented multicoil system, *uprox*®+ sensors have distinct advantages over conventional sensors. They detect all metals at the same large switching distance and are resistant to magnetic fields.

Type code	BI5U-M18EE-AP6X-H1141
Ident no.	1635117
Rated operating distance Sn	5 mm
Mounting condition	flush
Assured sensing range	≤ (0,81 x Sn) mm
Repeatability	≤ 2 % of full scale
Temperaturdrift	10 %
	≤ ± 15 %, ≤ -25 °C v ≥ +70 °C
Hysteresis	3…15 %
Ambient temperature	-30…+85 °C
Operating voltage	10…30VDC
Residual ripple	≤ 10 % U_{ss}
DC rated operational current	≤ 200 mA
No-load current I_0	≤ 15 mA
Residual current	≤ 0.1 mA
Rated insulation voltage	≤ 0.5 kV
Short-circuit protection	yes/ cyclic
Voltage drop at I_e	≤ 1.8 V
Wire breakage / Reverse polarity protection	yes/ complete
Output function	3-wire, NO contact, PNP
Protection class	⧈
Switching frequency	1.5 kHz
Design	threaded barrel, M18 x 1
Dimensions	82 mm
Housing material	metal, CuZn, chrome-plated
Material active face	Plastic, PA
Max. tightening torque housing nut	25 Nm
Connection	male, M12 x 1
Vibration resistance	55 Hz (1 mm)
Shock resistance	30 g (11 ms)
Protection class	IP67
Switching state	LED yellow

Edition • 2013-12-21T06:50:04+01:00

Hans Turck GmbH & Co.KG ● D-45472 Mülheim an der Ruhr ● Witzlebenstraße 7 ● Tel. 0208 4952-0 ● Fax 0208 4952-264 ● more@turck.com ● www.turck.com

Distance D	2 x B
Distance W	3 x Sn
Distance T	3 x B
Distance S	1.5 x B
Distance G	6 x Sn

Diameter of the active area B	Ø 18 mm

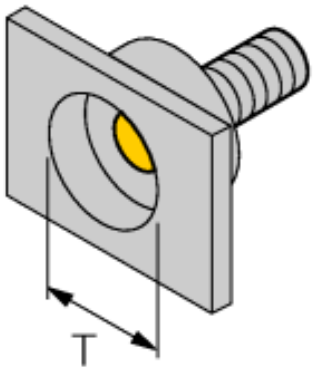

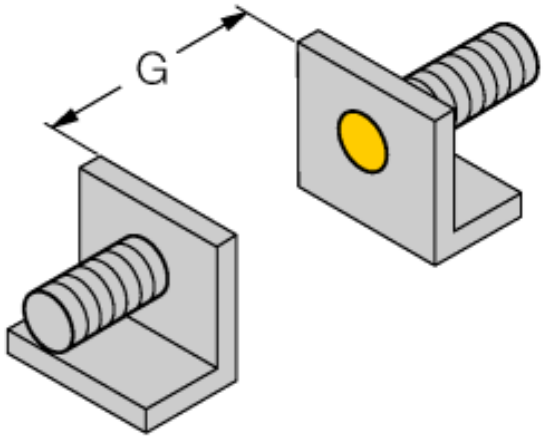

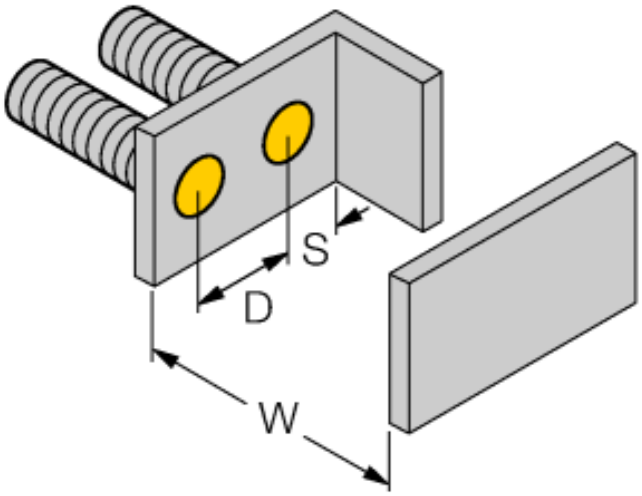

Edition • 2013-12-21T06:50:04+01:00

Accessories

Type code	Ident no.	Description	Dimension drawing
MW-18	6945004	Mounting bracket for threaded barrel devices; material: Stainless steel A2 1.4301 (AISI 304)	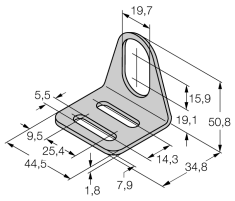
BSS-18	6901320	Mounting bracket for smooth and threaded barrel devices; material: Polypropylene	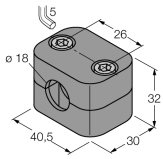

Edition • 2013-12-21T06:50:04+01:00