Inductive sensor
For the food industry
NI30U-EM30WD-RP6X 7M

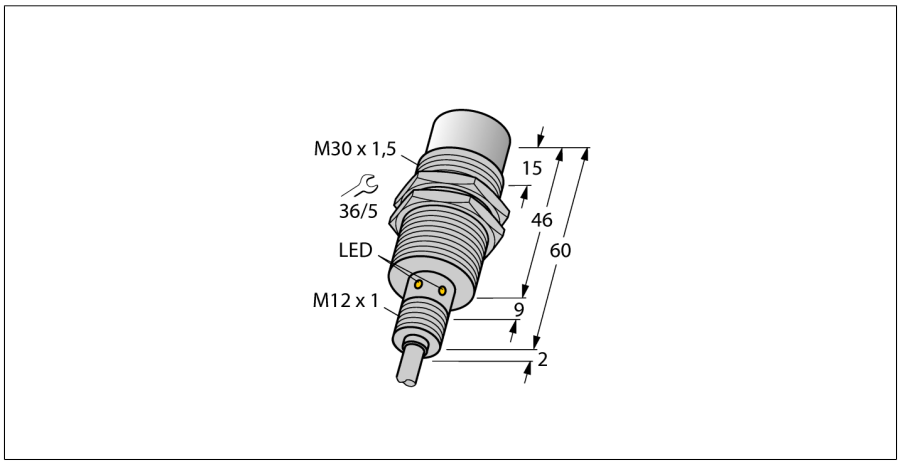

- **Threaded barrel, M30 x 1.5**
- **Stainless steel, 1.4404**
- **Front cap made of liquid crystal polymer**
- **Factor 1 for all metals**
- **Resistant to magnetic fields**
- **Temperatures -40 °C … +100 °C**
- **High protection class IP69K, for harsh environments**
- **Special double-lip seal**
- **Protection against all common acid and alkaline cleaning agents**
- **Laser engraved label, permanently legible**
- **DC 3-wire, 10…30 VDC**
- **NC contact, PNP output**
- **Cable connection**

Type code	NI30U-EM30WD-RP6X 7M
Ident no.	1635357
Rated switching distance Sn	30 mm
Mounting conditions	non-flush
Assured switching distance	≤ (0,81 x Sn) mm
Repeatability	≤ 2 % of full scale
Temperature drift	≤ ± 10 %
	≤ ± 20 %, ≤ -25 °C , ≥ +70 °C
Hysteresis	3…15 %
Ambient temperature	-40…+100 °C
Operating voltage	10…30VDC
Residual ripple	≤ 10 % U_{ss}
DC rated operational current	≤ 200 mA
No-load current I_0	≤ 20 mA
Residual current	≤ 0.1 mA
Rated insulation voltage	≤ 0.5 kV
Short-circuit protection	yes/ cyclic
Voltage drop at I_e	≤ 1.8 V
Wire breakage / Reverse polarity protection	yes/ complete
Output function	3-wire, NC contact, PNP
Switching frequency	0.5 kHz
Construction	threaded barrel, M30 x 1.5
Dimensions	66 mm
Housing material	stainless steel, V4A (1.4404)
Material active area	plastic, LCP
End cap	Plastic, PP, transparent
Admissible pressure on front cap	≤ 10 bar
Max. tightening torque housing nut	75 Nm
Connection	cable
Cable quality	5.2 mm, LifYY, PVC, 7m
Cable cross section	3 x 0.34 mm²
Vibration resistance	55 Hz (1 mm)
Shock resistance	30 g (11 ms)
IP Rating	IP68 / IP69K
MTTF	874 years acc. to SN 29500 (Ed. 99) 40 °C
Switching state	LED yellow

Wiring diagram

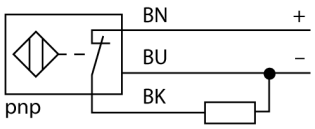

Functional principle

The inductive sensors for the food industry are absolutely tight and resistant to cleaning agents and disinfectants. The requirements of the protection classes IP68 and IP69K are well exceeded by our uprox®+ sensors. The sensors are entirely protected by the LCP front cap and the stainless steel housing.

Derating curve

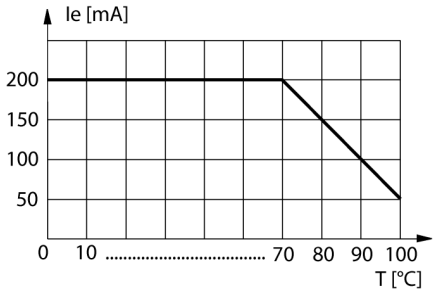

Edition • 2015-07-27T18:50:25+02:00

Inductive sensor
For the food industry
NI30U-EM30WD-RP6X 7M

Distance D	135 mm
Distance W	3 x Sn
Distance T	3 x B
Distance S	1.5 x B
Distance G	6 x Sn
Distance N	15mm

Diameter of the active area B	Ø 30 mm

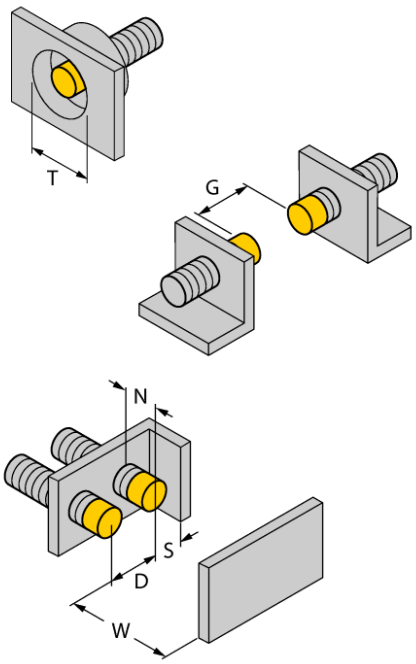

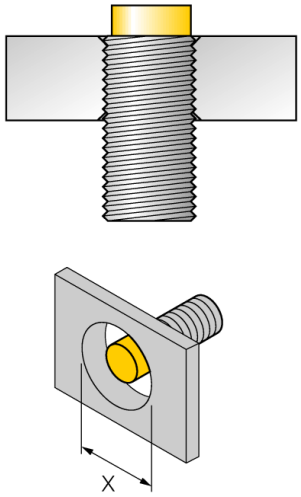

All non-flush mountable *uprox*®+ threaded barrel sensors can be screwed to the upper edge of the barrel. Thus safe operation is guaranteed with a reduced switching distance of max. 20 %.

When installed in an aperture plate a distance of X = 140 mm must be observed.

Edition • 2015-07-27T18:50:25+02:00

Accessories

Type code	Ident no.	Description	Design
MW-30	6945005	Mounting bracket for threaded barrel devices; material: Stainless steel A2 1.4301 (AISI 304)	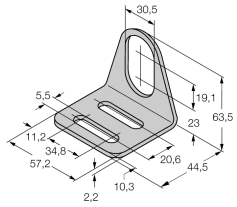
BSS-30	6901319	Mounting bracket for smooth and threaded barrel devices; material: Polypropylene	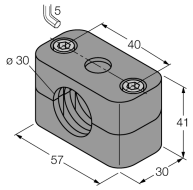

Edition • 2015-07-27T18:50:25+02:00