Inductive sensor
NI8U-MT12E-AP6X-H1141

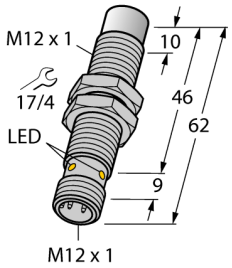

- **Threaded barrel, M12 x 1**
- **Brass, PTFE-coated**
- **DC 3-wire, 10…30 VDC**
- **NO contact, PNP output**
- **M12 x 1 male connector**

Wiring diagram

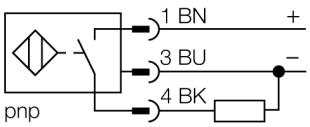

Type code	NI8U-MT12E-AP6X-H1141
Ident no.	1644246
Rated switching distance Sn	8 mm
Mounting conditions	non-flush
Assured switching distance	≤ (0,81 x Sn) mm
Repeatability	≤ 2 % of full scale
Temperature drift	≤ ± 10 %
	≤ ± 15 %, ≤ -25 °C v ≥ +70 °C
Hysteresis	3…15 %
Ambient temperature	-30…+85 °C
Operating voltage	10…30VDC
Residual ripple	≤ 10 % U_{ss}
DC rated operational current	≤ 200 mA
No-load current I_0	≤ 20 mA
Residual current	≤ 0.1 mA
Rated insulation voltage	≤ 0.5 kV
Short-circuit protection	yes/ cyclic
Voltage drop at I_e	≤ 1.8 V
Wire breakage / Reverse polarity protection	yes/ complete
Output function	3-wire, NO contact, PNP
Protective insulation	⧈
Switching frequency	2 kHz
Construction	threaded barrel, M12 x 1
Dimensions	62 mm
Housing material	metal, CuZn, PTFE-coated
Material active area	plastic, LCP, PTFE-coated
Max. tightening torque housing nut	7 Nm
Connection	male, M12 x 1
Vibration resistance	55 Hz (1 mm)
Shock resistance	30 g (11 ms)
IP Rating	IP67
MTTF	874 years acc. to SN 29500 (Ed. 99) 40 °C
Switching state	LED yellow

Functional principle

Inductive sensors detect metal objects contactless and wear-free. *uprox*® Factor 1 sensors have significant advantages due to their patented ferrite-coreless multicoil system. They detect all metals at the same large switching distance and are resistant to magnetic fields.

Edition • 2015-07-27T18:59:00+02:00

Distance D	48 mm
Distance W	3 x Sn
Distance T	45 mm
Distance S	1.5 x B
Distance G	6 x Sn
Distance N	2 x Sn

Diameter of the active area B	Ø 12 mm

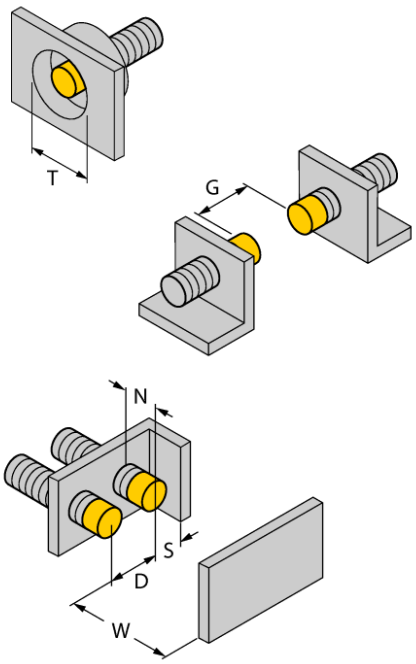

Edition • 2015-07-27T18:59:00+02:00

Hans Turck GmbH & Co.KG ● D-45472 Mülheim an der Ruhr ● Witzlebenstraße 7 ● Tel. 0208 4952-0 ● Fax 0208 4952-264 ● more@turck.com ● www.turck.com

Accessories

Type code	Ident no.	Description	Design
BST-12B	6947212	Fixing clamp for threaded barrel devices, with dead-stop; material: PA6	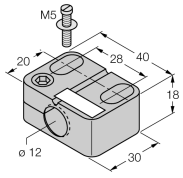
QMT-12	6945106	Quick-mount bracket with dead-stop; material: brass, PTFE-coated; male thread M16 x 1. Note: The switching distance of the proximity switches may reduce when using quick-mount brackets.	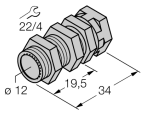
BSS-12	6901321	Mounting bracket for smooth and threaded barrel devices; material: Polypropylene	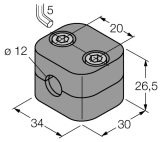

Edition • 2015-07-27T18:59:00+02:00