Inductive sensor
NI12U-EM18H-AP6X-H1141

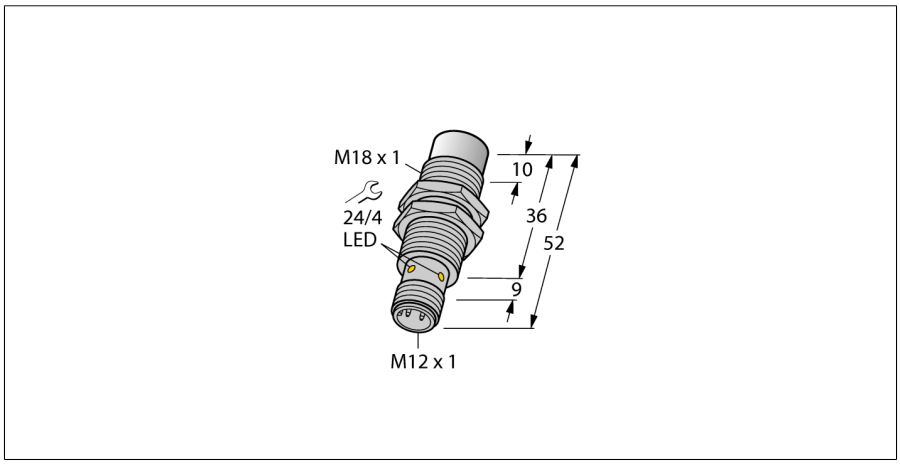

- **Threaded barrel, M18 x 1**
- **Stainless steel, 1.4301**
- **Duroplast front cap, very resistant to thermal and mechanical load**
- **Factor 1 for all metals**
- **Protection class IP68**
- **Resistant to magnetic fields**
- **Extended temperature range**
- **High switching frequency**
- **Auto-compensation protects against pre-attenuation**
- **DC 3-wire, 10…30 VDC**
- **NO contact, PNP output**
- **M12 x 1 male connector**

Type code	NI12U-EM18H-AP6X-H1141
Ident no.	1645412
Rated switching distance Sn	12 mm
Mounting conditions	non-flush, partially embeddable
Assured switching distance	≤ (0,81 x Sn) mm
Repeatability	≤ 2 % of full scale
Temperature drift	≤ ± 10 %
	≤ ± 20 %, ≤ -25 °C v ≥ +70 °C
Hysteresis	3…15 %
Ambient temperature	-30…+85 °C
Operating voltage	10…30VDC
Residual ripple	≤ 10 % U_{ss}
DC rated operational current	≤ 200 mA
No-load current I_0	≤ 20 mA
Residual current	≤ 0.1 mA
Rated insulation voltage	≤ 0.5 kV
Short-circuit protection	yes/ cyclic
Voltage drop at I_e	≤ 1.8 V
Wire breakage / Reverse polarity protection	yes/ complete
Output function	3-wire, NO contact, PNP
Protective insulation	2
Switching frequency	2 kHz
Construction	threaded barrel, M18 x 1
Dimensions	52 mm
Housing material	stainless steel, V2A (1.4301)
Material active area	plastic, Duroplast
Max. tightening torque housing nut	25 Nm
Connection	male, M12 x 1
Vibration resistance	55 Hz (1 mm)
Shock resistance	30 g (11 ms)
IP Rating	IP68
MTTF	874 years acc. to SN 29500 (Ed. 99) 40 °C
Switching state	LED yellow

Wiring diagram

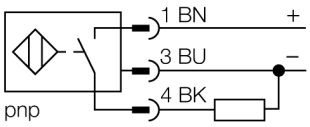

Functional principle

Inductive sensors detect metal objects contactless and wear-free. *uprox*® Factor 1 sensors have significant advantages due to their patented ferrite-coreless multicoil system. They detect all metals at the same large switching distance and are resistant to magnetic fields.

Edition • 2015-07-27T19:09:58+02:00

Hans Turck GmbH & Co.KG ● D-45472 Mülheim an der Ruhr ● Witzlebenstraße 7 ● Tel. 0208 4952-0 ● Fax 0208 4952-264 ● more@turck.com ● www.turck.com

Inductive sensor
NI12U-EM18H-AP6X-H1141

Distance W	3 x Sn
Distance T	65 mm
Distance S	0.5 x B
Distance G	6 x Sn
Distance N	2 x Sn

Diameter of the active area B	Ø 18 mm

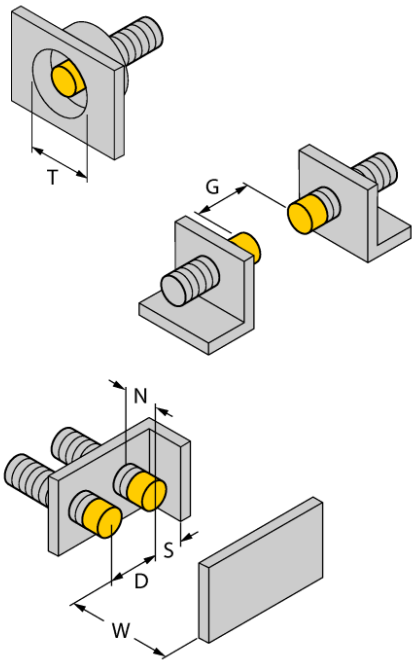

Edition • 2015-07-27T19:09:58+02:00

Hans Turck GmbH & Co.KG ● D-45472 Mülheim an der Ruhr ● Witzlebenstraße 7 ● Tel. 0208 4952-0 ● Fax 0208 4952-264 ● more@turck.com ● www.turck.com

Accessories

Type code	Ident no.	Description	Design
BST-18B	6947214	Fixing clamp for threaded barrel devices, with dead-stop; material: PA6	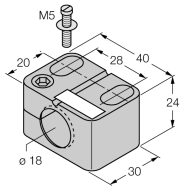
QM-18	6945102	Quick-mount bracket with dead-stop; material: Chrome-plated brass Male thread M24 x 1.5. Note: The switching distance of proximity switches can be reduced by the use of quick-mount brackets.	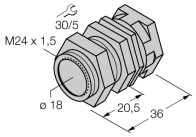
MW-18	6945004	Mounting bracket for threaded barrel devices; material: Stainless steel A2 1.4301 (AISI 304)	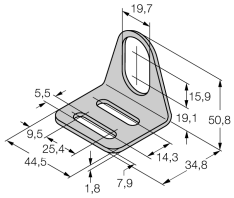
BSS-18	6901320	Mounting bracket for smooth and threaded barrel devices; material: Polypropylene	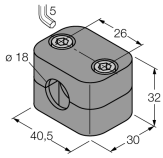

Edition • 2015-07-27T19:09:58+02:00