BID2.5-G120-AP6-H1141
Inductive sensor – For high pressures

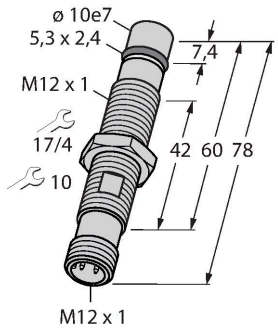

Technical data

Type	BID2.5-G120-AP6-H1141
Ident. no.	1682002
Rated switching distance	2.5 mm
Mounting conditions	Flush
Secured operating distance	≤ (0,81 x Sn) mm
Correction factors	St37 = 1; Al = 0,32; Cu = 0,27; Ms = 0,45; Edelstahl = 0,75
Repeat accuracy	≤ 4 % of full scale
Static pressure	≤ 500 bar
Dynamic pressure	≤ 500 bar
Vacuum-tight up to	10^{-8} Torr
Temperature drift	≤ ± 15 %
Hysteresis	3…15 %
Ambient temperature	-25…+80 °C
Operating voltage	10…30 VDC
Residual ripple	≤ 20 % U_{ss}
DC rated operational current	≤ 200 mA
No-load current	≤ 10 mA
Residual current	≤ 0.1 mA
Isolation test voltage	≤ 0.5 kV
Short-circuit protection	yes / Cyclic
Voltage drop at	≤ 2 V
Wire breakage/Reverse polarity protection	yes / Complete
Output function	3-wire, NO contact, PNP
Switching frequency	0.6 kHz
Design	Threaded barrel,M12 × 1
Dimensions	78 mm
Housing material	Stainless steel, V2A (1.4305)

Features

- Threaded barrel, M12 x 1
- Stainless steel, 1.4301
- Admissible static pressure 500 bar
- Admissible peak pressure 1000 bar
- Suitable for use in high vacuum
- DC 3-wire, 10…30 VDC
- NO contact, PNP output
- M12 x 1 male connector

Wiring diagram

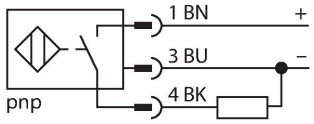

Functional principle

Inductive sensors detect metal objects contactless and wear-free. For this, they use a high-frequency electromagnetic AC field that interacts with the target. This field is generated by an LC resonant circuit with a ferrite core. Pressure resistant inductive sensors withstand pressures of up to 1000 bar which makes them perfectly suited for position control in hydraulic cylinders.

BID2.5-G120-AP6-H1141| 01-10-2019 13-21 | Technical modifications reserved

Technical data

Active area material	Plastic, ZrO_2
Max. tightening torque housing nut	40 Nm
Electrical connection	Connectors, M12 × 1
Vibration resistance	55 Hz (1 mm)
Shock resistance	30 g (11 ms)
Protection class	IP68
MTTF	1053 years acc. to SN 29500 (Ed. 99) 30 °C

Mounting instructions

Mounting instructions/Description

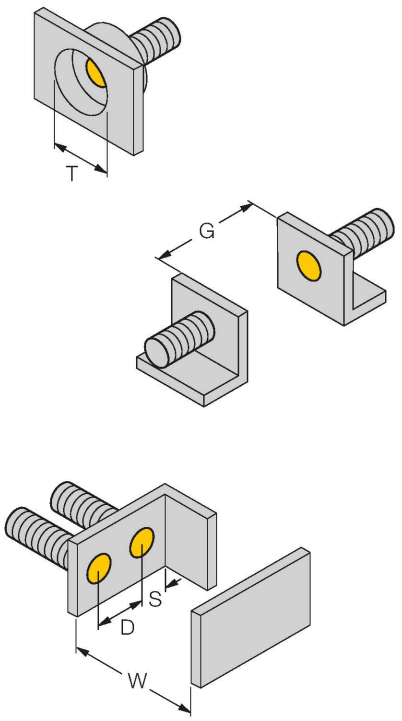

Distance T	3 x B
Diameter active area B	Ø 12 mm

BID2.5-G120-AP6-H1141| 01-10-2019 13-21 | Technical modifications reserved