BI5U-M18-ASIX-H1140/S1266
Inductive Sensor

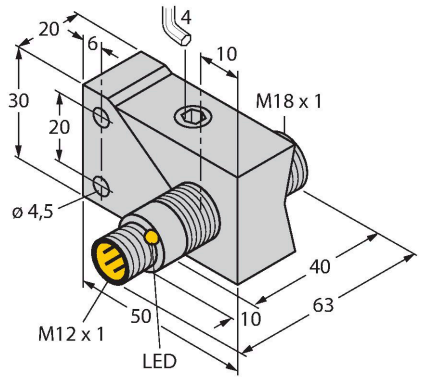

Technical data

Type	BI5U-M18-ASIX-H1140/S1266
ID	1901019
Remark to product	data output assignment: D0 = switching output, D1…D3 = 1
Special version	S1266 corresponds to: Reduced switching frequency, increased immunity to interference, with modified output bit assignment according to data sheet
General data	
Rated switching distance	5 mm
Mounting conditions	Flush
Secured operating distance	≤ (0.81 × Sn) mm
Repeat accuracy	≤ 2 % of full scale
Temperature drift	≤ ±10 %
	≤ ± 20 %, ≤ 0 °C
Hysteresis	3…15 %
Electrical data	
Operating voltage	18…33 VDC
No-load current	30 mA
Isolation test voltage	≤ 0.5 kV
Communication protocol	AS-Interface
Output function	2-wire
I/O configuration (HEX) / ID code (HEX)	1 / 1
I/O matrix output	0 = output 1
	1 - 3 = 1
DC field stability	300 mT
AC field stability	300 mT_{ss}
Switching frequency	0.2 kHz

Features

- Threaded barrel, M18 x 1
- Chrome-plated brass
- Factor 1 for all metals
- Resistant to magnetic fields
- High switching frequency
- AS-Interface, 18…33 VDC
- M12 x 1 male connector

Wiring diagram

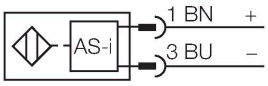

Functional principle

Inductive sensors detect metal objects contactless and wear-free. Due to the patented multicoil system, uprox®+ sensors have distinct advantages over conventional sensors. They detect all metals at the same large switching distance and are resistant to magnetic fields.

BI5U-M18-ASIX-H1140/S1266| 03-11-2021 09-12 | Technical modifications reserved

Technical data

Mechanical data	
Design	Threaded barrel, M18 × 1
Dimensions	63 mm
Housing material	Metal, CuZn, Chrome-plated
Active area material	Plastic, PBT
Max. tightening torque of housing nut	25 Nm
Electrical connection	Connector, M12 × 1
Environmental conditions	
Ambient temperature	-25…+70 °C
Vibration resistance	55 Hz (1 mm)
Shock resistance	30 g (11 ms)
Protection class	IP67
MTTF	874 years acc. to SN 29500 (Ed. 99) 40 °C
Switching state	LED, Yellow
Included in delivery	Mounting Bracket

Mounting instructions

Mounting instructions/Description

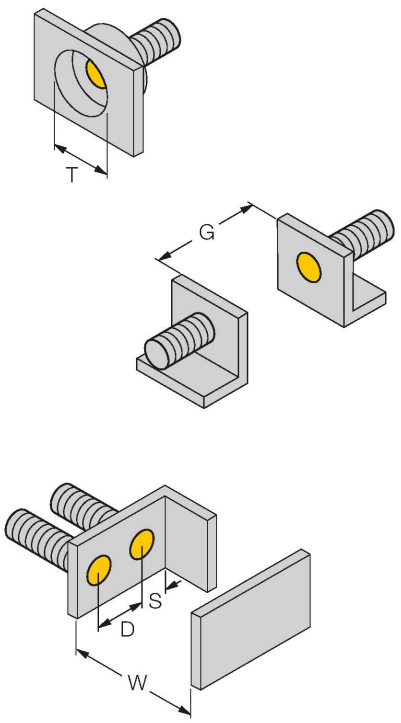

Distance D	2 x B
Distance W	3 x Sn
Distance T	3 x B
Distance S	1.5 x B
Distance G	6 x Sn
Diameter active area B	Ø 18 mm

BI5U-M18-ASIX-H1140/S1266| 03-11-2021 09-12 | Technical modifications reserved