BC20-K40SR-VP4X2-H1141
Capacitive Sensor

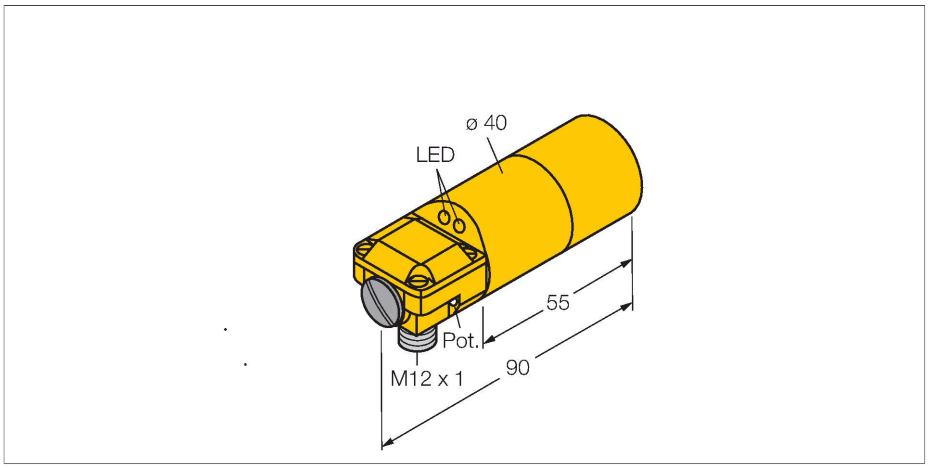

Technical data

Type	BC20-K40SR-VP4X2-H1141
ID	2510002
Rated switching distance (flush)	20 mm
Rated switching distance (non-flush)	30 mm
Secured operating distance	≤ (0.72 × Sn) mm
Hysteresis	1…20 %
Temperature drift	Typical 20 %
Repeat accuracy	≤ 2 % of full scale
Ambient temperature	-25…+70 °C
Electrical data	
Operating voltage U_B	65 VDC
Ripple U_{ss}	≤ 10 % U_{Bmax}
DC rated operating current I_e	≤ 200 mA
No-load current	≤ 15 mA
Residual current	≤ 0.1 mA
Switching frequency	0.1 kHz
Oscillation frequency	According to EN 60947-5-2, 8.2.6.2 Table 9: 0.1…2.0 MHz
Isolation test voltage	0.5 kV
Output function	4-wire, Complementary contact, PNP
Short-circuit protection	yes/Cyclic
Voltage drop at I_e	≤ 1.8 V
Wire break/reverse polarity protection	yes/Complete
Tests/approvals	
Approvals	UL
UL registration number	E210608

Features

- Smooth barrel, Ø 40 mm
- Plastic, ABS
- Fine adjustment via potentiometer
- DC 4-wire, 10…65 VDC
- Complementary contact, PNP output
- M12 × 1 connector

Wiring diagram

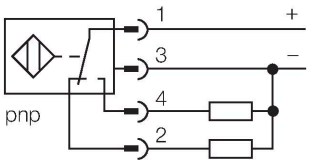

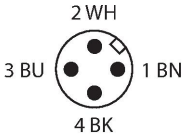

Functional principle

Capacitive proximity switches are designed for non-contact and wear-free detection of electrically conductive as well as non-conductive metal objects.

BC20-K40SR-VP4X2-H1141| 07-04-2025 15-24 | Technical modifications reserved

Technical data

Mechanical data	
Design	Smooth barrel, 40 mm
Dimensions	90 mm
Housing material	Plastic, ABS
Active area material	ABS
Electrical connection	Connector, M12 × 1
Clamping ability	≤ 2.5 mm²
Vibration resistance	55 Hz (1 mm)
Shock resistance	30 g (11 ms)
Protection class	IP67
MTTF	1080 years acc. to SN 29500 (Ed. 99) 40 °C
Power-on indication	LED, Green
Switching state	LED, Yellow
Included in delivery	BS40, cable gland, blanking plug

Mounting instructions

Product features

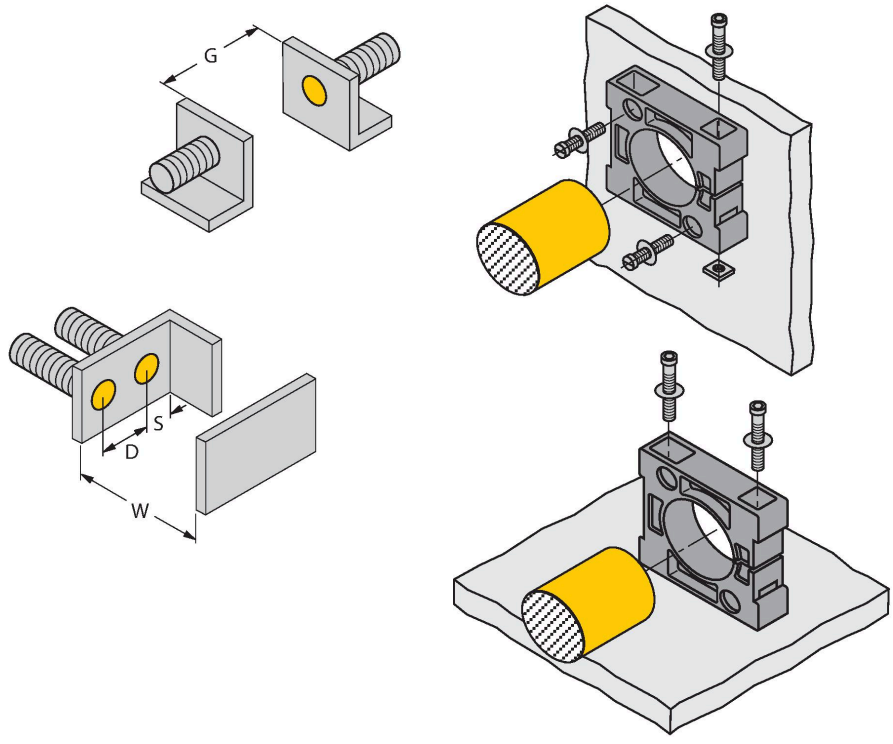

Distance D	40 mm
Distance W	60 mm
Distance S	60 mm
Distance G	120 mm
Diameter active area B	Ø 40 mm

The given minimum distances have been checked in compliance with the standard switching distance.
Should the sensitivity of the sensors be changed via potentiometer, the data sheet specifications no longer apply.

BC20-K40SR-VP4X2-H1141| 07-04-2025 15-24 | Technical modifications reserved

Accessories

MAP-K40	6950014
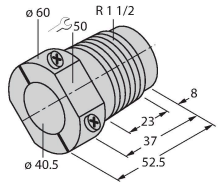	Mounting adapter; material: Polypropylene; sensor replacement with filled container possible (adapter remains in container during sensor replacement)

BS 40	69466
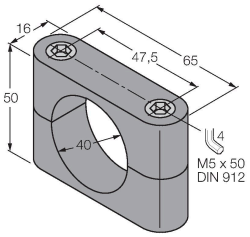	Fixing clamp; material mounting block: PBT

Accessories

Dimension drawing	Type	ID	
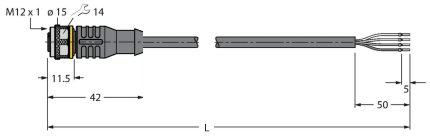	RKC4.4T-2/TEL	6625013	Connection cable, M12 female connector, straight, 4-pin, cable length: 2 m, jacket material: PVC, black; cULus approval
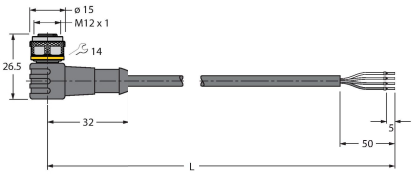	WKC4.4T-2/TEL	6625025	Connection cable, M12 female connector, angled, 4-pin, cable length: 2 m, jacket material: PVC, black; cULus approval
	RKC4.4T-2/TXL	6625503	Connection cable, M12 female connector, straight, 4-pin, cable length: 2 m, jacket material: PUR, black; cULus approval
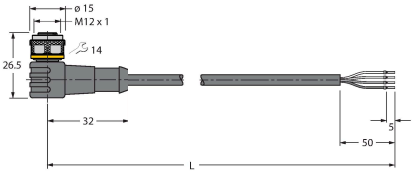	WKC4.4T-2/TXL	6625515	Connection cable, M12 female connector, angled, 4-pin, cable length: 2 m, jacket material: PUR, black; cULus approval
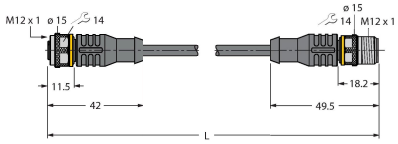	RKC4.4T-2-RSC4.4T/TEL	6625208	Extension cable, M12 female connector, straight, 4-pin to M12 male connector, straight, 4-pin, cable length: 2 m, jacket material: PVC, black; cULus approval

BC20-K40SR-VP4X2-H1141| 07-04-2025 15-24 | Technical modifications reserved

Dimension drawing	Type	ID	
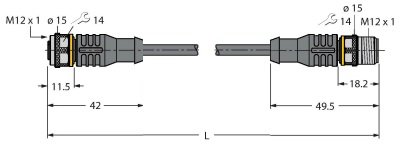	RKC4.4T-2-RSC4.4T/TXL	6625608	Extension cable, M12 female connector, straight, 4-pin to M12 male connector, straight, 4-pin; cable length: 2 m, jacket material: PUR, black; cULus approval
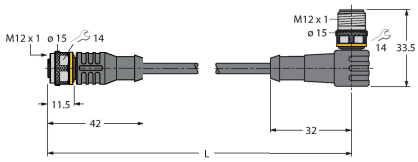	RKC4.4T-2-WSC4.4T/TXL	6625624	Extension cable, M12 female connector, straight, 4-pin to M12 male connector, angled, 4-pin; cable length: 2 m, jacket material: PUR, black; cULus approval
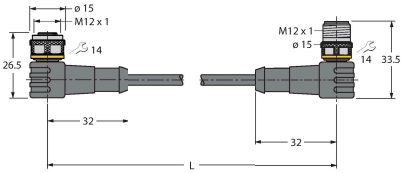	WKC4.4T-2-WSC4.4T/TXL	6625656	Extension cable, M12 female connector, angled, 4-pin to M12 male connector, angled, 4-pin; cable length: 2 m, jacket material: PUR, black; cULus approval

BC20-K40SR-VP4X2-H1141| 07-04-2025 15-24 | Technical modifications reserved