Capacitive sensor
BC8-Q10-RN6X2/S250

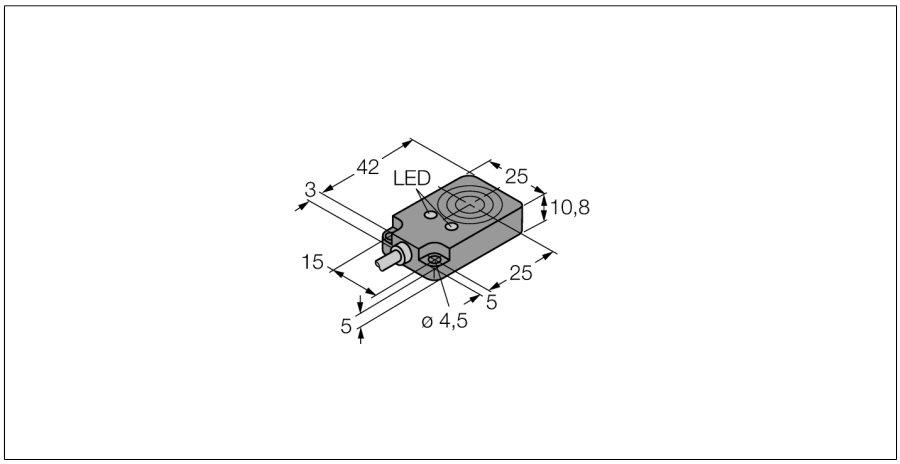

- **Rectangular, height 10.8 mm**
- **Active face on top**
- **Plastic, PBT-GF30-V0**
- **Fixed settings**
- **DC 3-wire, 10…30 VDC**
- **NC contact, NPN output**
- **Cable connection**

Wiring diagram

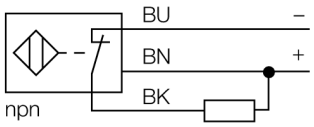

Type code	BC8-Q10-RN6X2/S250
Ident no.	2621199
Rated switching distance (flush)	8 mm
Rated switching distance (non-flush)	8 mm
Assured switching distance	≤ (0.72 x Sn) mm
Hysteresis	2…20 %
Temperature drift	type 20 %
Repeatability	≤ 2 % of full scale
Ambient temperature	-25…+70 °C
Operating voltage	10…30VDC
Residual ripple	≤ 10 % U_{ss}
DC rated operational current	≤ 200 mA
No-load current I_0	≤ 15 mA
Residual current	≤ 0.1 mA
Switching frequency	0.1 kHz
Rated insulation voltage	≤ 0.5 kV
Output function	3-wire, NC contact, NPN
Short-circuit protection	yes/ cyclic
Voltage drop at I_e	≤ 1.8 V
Wire breakage / Reverse polarity protection	yes/ complete
Construction	rectangular, Q10
Dimensions	42 x 25 x 10.8 mm
Housing material	plastic, PBT
Material active area	plastic, PBT
Connection	cable
Cable quality	Ø 5.2, LifY-11Y, PUR, 2m
Cable cross section	3 x 0.25 mm^2
Vibration resistance	55 Hz (1 mm)
Shock resistance	30 g (11 ms)
IP Rating	IP67
MTTF	1080 years acc. to SN 29500 (Ed. 99) 40 °C
Power-on indication	LED green
Switching state	LED yellow

Functional principle

Capacitive proximity switches are designed for non-contact and wear-free detection of electrically conductive as well as non-conductive metal objects.

Edition • 2015-07-27T20:05:38+02:00

Accessories

Type code	Ident no.	Description	Design
MW-Q08/Q10	6945007	Mounting bracket for rectangular Q08 or Q10; material VA 1.4301	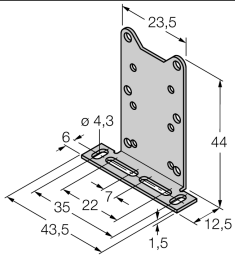

Edition • 2015-07-27T20:05:38+02:00