Inductive sensor
Ni50-CP80-FDZ30X2

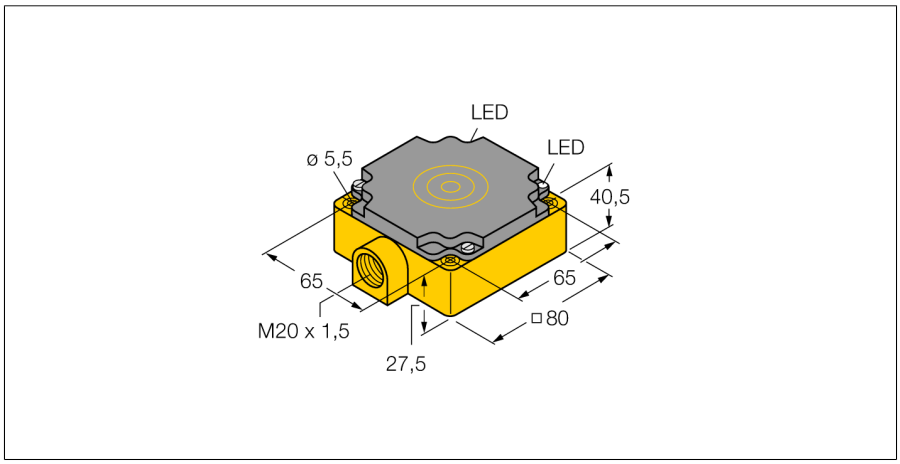

- **Rectangular, height 41 mm**
- **Plastic, PBT-GF30-V0**
- **AC 2-wire, 20…250 VDC**
- **DC 2-wire, 10…300 VDC**
- **NC/NO programmable**
- **Terminal chamber**

Wiring diagram

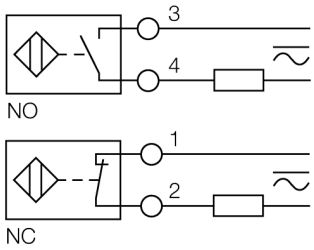

Type code	Ni50-CP80-FDZ30X2
Ident no.	42311
Rated switching distance Sn	50 mm
Mounting conditions	non-flush
Assured switching distance	≤ (0,81 x Sn) mm
Correction factors	St37 = 1; Al = 0.3; stainless steel = 0.7; Ms = 0.4
Repeatability	≤ 2 % of full scale
Temperature drift	≤ ± 10 %
Hysteresis	3…15 %
Ambient temperature	-25…+70 °C
Operating voltage	20…250 VAC
Operating voltage	10…300VDC
AC rated operational current	≤ 400 mA
DC rated operational current	≤ 300 mA
Frequency	≥ 50…≤ 60 Hz
Residual current	≤ 1.7 mA
Rated insulation voltage	≤ 1.5 kV
Surge current	≤ 3 A (≤ 20 ms max. 5 Hz)
Short-circuit protection	yes/ latching
Voltage drop at I_e	≤ 6 V
Wire breakage / Reverse polarity protection	yes/ complete
Output function	2-wire, connection programmable
Smallest operating current I_m	≥ 3 mA
Switching frequency	0.02 kHz
Construction	rectangular, CP80
Dimensions	80 x 80 x 41 mm
Housing material	plastic, PBT
Connection	Terminal chamber
Clamping ability	≤ 2.5 mm²
Vibration resistance	55 Hz (1 mm)
Shock resistance	30 g (11 ms)
IP Rating	IP67
MTTF	2283 years acc. to SN 29500 (Ed. 99) 40 °C
Power-on indication	LED green
Switching state	LED red

Functional principle

Inductive sensors detect metal objects contactless and wear-free. For this, they use a high-frequency electromagnetic AC field that interacts with the target. Inductive sensors generate this field via an RLC circuit with a ferrite coil.

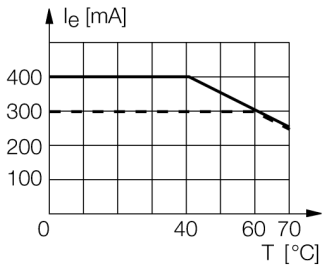

Edition • 2015-07-27T23:31:16+02:00

Hans Turck GmbH & Co.KG ● D-45472 Mülheim an der Ruhr ● Witzlebenstraße 7 ● Tel. 0208 4952-0 ● Fax 0208 4952-264 ● more@turck.com ● www.turck.com

Inductive sensor
Ni50-CP80-FDZ30X2

Distance W	3 x Sn
Distance S	1.5 x B
Distance G	6 x Sn
Distance A	1 x B
Distance C	1 x B

Width of the active face B	80 mm

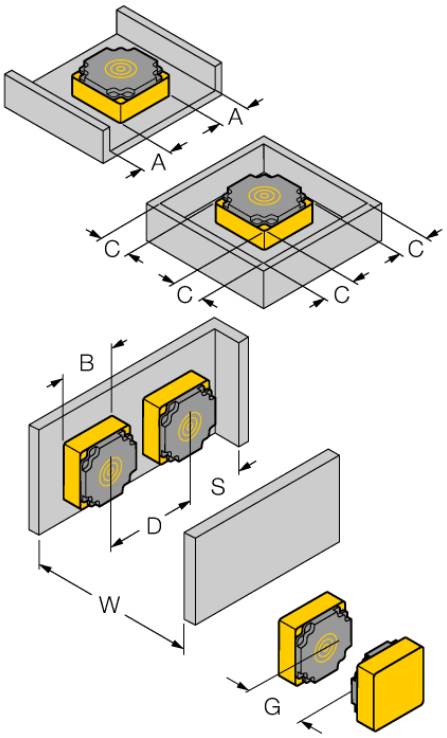

Edition • 2015-07-27T23:31:16+02:00

Hans Turck GmbH & Co.KG ● D-45472 Mülheim an der Ruhr ● Witzlebenstraße 7 ● Tel. 0208 4952-0 ● Fax 0208 4952-264 ● more@turck.com ● www.turck.com