Inductive sensor
With increased switching distance
Ni35U-CK40-ADZ30X2

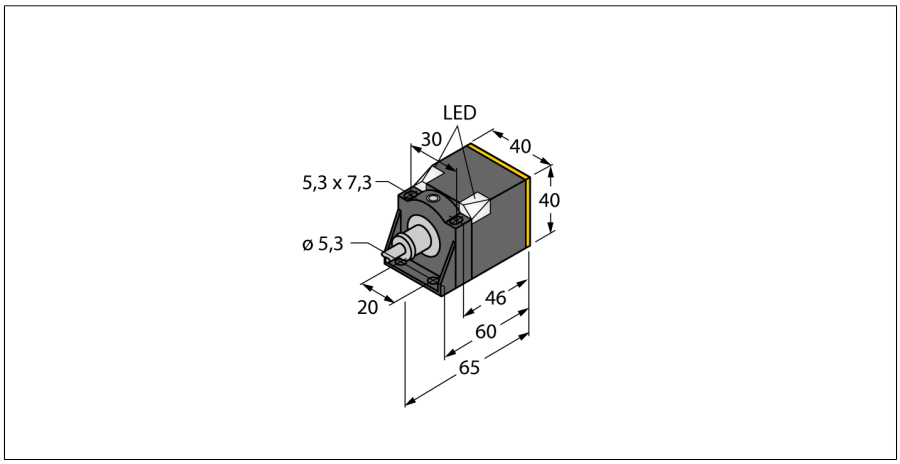

Type code	Ni35U-CK40-ADZ30X2
Ident no.	4280442
Rated switching distance Sn	35 mm
Mounting conditions	non-flush
Assured switching distance	≤ (0,81 x Sn) mm
Repeatability	≤ 2 % of full scale
Temperature drift	≤ ± 10 %
	≤ ± 20 %, ≤ -25 °C v ≥ +70 °C
Hysteresis	3…15 %
Ambient temperature	-30…+85 °C
Operating voltage	20…250 VAC
Operating voltage	10…300VDC
AC rated operational current	≤ 400 mA
DC rated operational current	≤ 300 mA
Frequency	≥ 50…≤ 60 Hz
Residual current	≤ 1.7 mA
Rated insulation voltage	≤ 1.5 kV
Surge current	≤ 3 A (≤ 20 ms max. 5 Hz)
Short-circuit protection	yes/ latching
Voltage drop at I_e	≤ 6 V
Wire breakage / Reverse polarity protection	yes/ complete
Output function	2-wire, NO contact
Smallest operating current I_m	≥ 3 mA
Protective insulation	⧈
Switching frequency	0.01 kHz
Construction	rectangular, CK40
Dimensions	65 x 40 x 40 mm
	variable orientation of active face in 5 directions
Housing material	plastic, PBT, black
Connection	cable
Cable quality	5.2 mm, LifYY, PVC, 2m
Cable cross section	3 x 0.34 mm²
Vibration resistance	55 Hz (1 mm)
Shock resistance	30 g (11 ms)
IP Rating	IP68
MTTF	874 years acc. to SN 29500 (Ed. 99) 40 °C
Power-on indication	2 LEDs green
Switching state	LED yellow
Included in delivery	BS4-CK40

- **Rectangular, height 40 mm**
- **Variable orientation of active face in 5 directions**
- **Plastic, PBT-GF30-V0**
- **High luminance corner LEDs**
- **Optimum view on supply voltage and switching state from any position**
- **Only use the included plastic clip BS4-CK40**
- **Factor 1 for all metals**
- **Increased switching distance**
- **Protection class IP68**
- **Large coverage**
- **Resistant to magnetic fields**
- **Extended temperature range**
- **High switching frequency**
- **AC 2-wire, 20…250 VDC**
- **DC 2-wire, 10…300 VDC**
- **NO contact**
- **Cable connection**

Wiring diagram

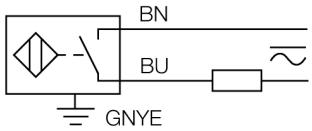

Functional principle

Inductive sensors detect metal objects contactless and wear-free. *uprox*® Factor 1 sensors have significant advantages due to their patented ferrite-coreless multicoil system. They detect all metals at the same large switching distance and are resistant to magnetic fields.

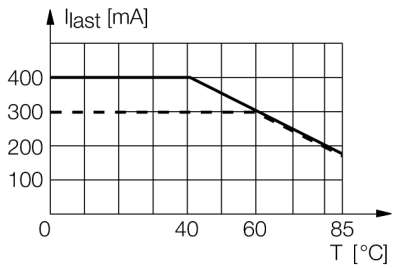

Edition • 2015-07-27T23:33:59+02:00

Inductive sensor
With increased switching distance
Ni35U-CK40-ADZ30X2

Distance D	120 mm
Distance W	105 mm
Distance S	60 mm
Distance G	210 mm
Distance N	30 mm

Width of the active face B	40 mm

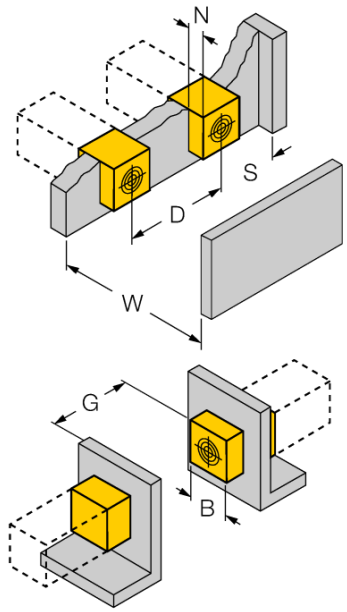

Edition • 2015-07-27T23:33:59+02:00

Hans Turck GmbH & Co.KG ● D-45472 Mülheim an der Ruhr ● Witzlebenstraße 7 ● Tel. 0208 4952-0 ● Fax 0208 4952-264 ● more@turck.com ● www.turck.com

Inductive sensor
With increased switching distance
Ni35U-CK40-ADZ30X2

Accessories

Type code	Ident no.	Description	Design
BSS-CP40	6901318	Mounting bracket for rectangular devices; material: Polypropylene	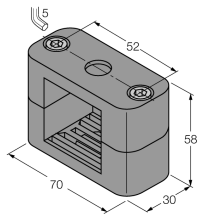

Edition • 2015-07-27T23:33:59+02:00

 Hans Turck GmbH & Co.KG ● D-45472 Mülheim an der Ruhr ● Witzlebenstraße 7 ● Tel. 0208 4952-0 ● Fax 0208 4952-264 ● more@turck.com ● www.turck.com