NI15-M30-RZ3X
Inductive Sensor

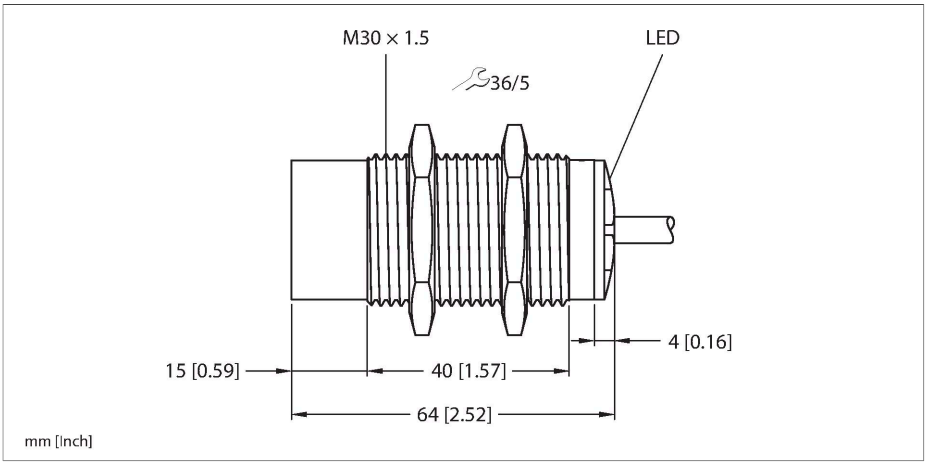

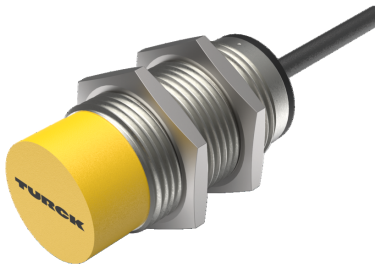

Technical data

Type	NI15-M30-RZ3X
ID	43167
General data	
Rated switching distance	15 mm
Mounting conditions	Non-flush
Secured operating distance	≤ (0.81 × Sn) mm
Correction factors	St37 = 1; Al = 0.3; stainless steel = 0.7; Ms = 0.4
Repeat accuracy	≤ 2 % of full scale
Temperature drift	≤ ±10 %
Hysteresis	3…15 %
Electrical data	
Operating voltage	20…250 VAC
Operating voltage	10…300 VDC
AC rated operational current	≤ 400 mA
DC rated operational current	≤ 300 mA
Frequency	≥ 50…≤ 60 Hz
Residual current	≤ 1.7 mA
Isolation test voltage	≤ 1.5 kV
Surge current	≤ 8 A (≤ 10 ms max. 5 Hz)
Voltage drop at I_e	≤ 6 V
Output function	2-wire, NC contact, 2-wire
Smallest operating current	≥ 3 mA
Switching frequency	0.02 kHz
Mechanical data	
Design	Threaded barrel, M30 x 1.5
Dimensions	64 mm

Features

- M30 × 1.5 threaded tube
- Chrome-plated brass
- AC 2-wire, 20…250 VAC
- DC 2-wire, 10…300 VDC
- NC contact
- Cable connection

Wiring diagram

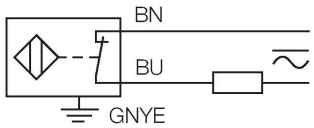

Functional principle

Inductive sensors detect metal objects contactless and wear-free. For this, they use a high-frequency electromagnetic AC field that interacts with the target. Inductive sensors generate this field via an RLC circuit with a ferrite coil.

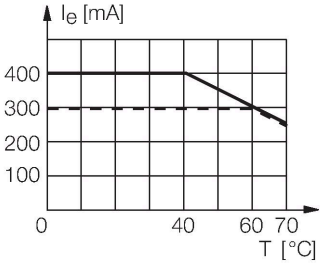

NI15-M30-RZ3X| 31-07-2023 10-04 | Technical modifications reserved

Technical data

Housing material	Metal, CuZn, Chrome-plated
Active area material	Plastic, PA12-GF30
End cap	Plastic, EPTR
Max. tightening torque of housing nut	75 Nm
Electrical connection	Cable
Cable quality	Ø 5.2 mm, LifYY, PVC, 2 m
Core cross-section	3 x 0.5 mm^2
Environmental conditions	
Ambient temperature	-25…+70 °C
Vibration resistance	55 Hz (1 mm)
Shock resistance	30 g (11 ms)
Protection class	IP67
MTTF	2283 years acc. to SN 29500 (Ed. 99) 40 °C
Switching state	LED, Red

Mounting instructions

Mounting instructions/Description

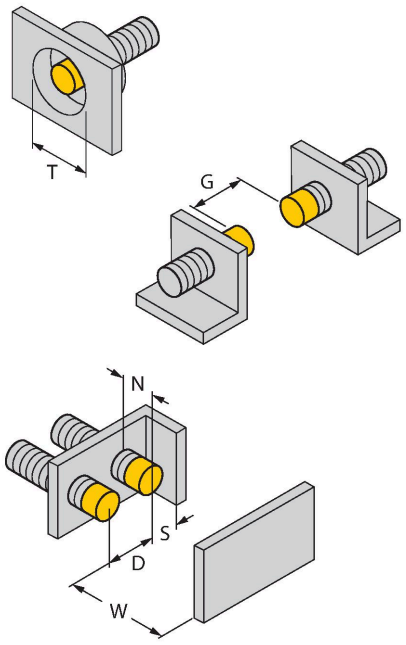

Distance D	3 x B
Distance W	3 x Sn
Distance T	3 x B
Distance S	1.5 x B
Distance G	6 x Sn
Distance N	2 x Sn
Diameter active area B	Ø 30 mm

NI15-M30-RZ3X| 31-07-2023 10-04 | Technical modifications reserved

Accessories

BST-30B	6947216

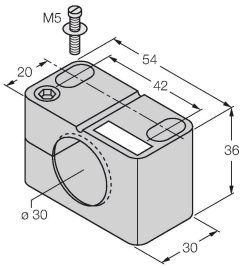

Mounting clamp for threaded barrel sensors, with dead-stop; material: PA6

QM-30	6945103

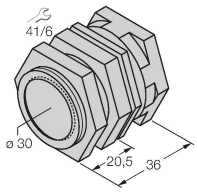

Quick-mount bracket with dead-stop; material: Chrome-plated brass. Male thread M36 × 1.5. Note: The switching distance of the proximity switches may change when using quick-mount brackets.

MW-30	6945005

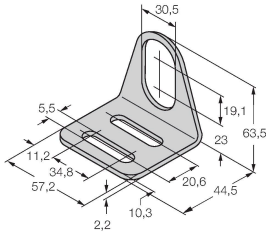

Mounting bracket for threaded barrel sensors; material: Stainless steel A2 1.4301 (AISI 304)

BSS-30	6901319

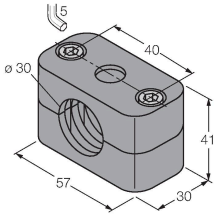

Mounting clamp for smooth and threaded barrel sensors; material: Polypropylene

NI15-M30-RZ3X| 31-07-2023 10-04 | Technical modifications reserved