# Inductive sensor
# Ni10-G18-RZ3X-B1331

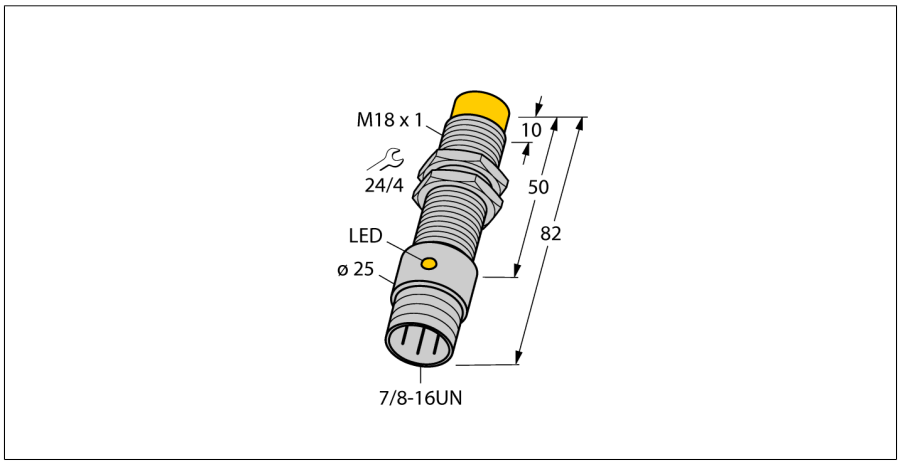


- **Threaded barrel, M18 x 1**
- **Chrome-plated brass**
- **AC 2-wire, 20…250 VAC**
- **2-wire DC, 10…300 VDC**
- **NC contact**
- **Male 7/8"**

### Wiring diagram

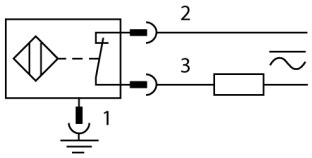


### Functional principle

Inductive sensors detect metal objects contactless and wear-free. For this, they use a high-frequency electromagnetic AC field that interacts with the target. Inductive sensors generate this field via an RLC circuit with a ferrite coil.

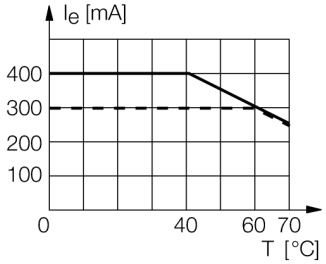


| | |
|---|---|
| **Type code** | Ni10-G18-RZ3X-B1331 |
| Ident no. | 4330720 |
| **Rated operating distance Sn** | 10 mm |
| Mounting condition | non-flush |
| Assured sensing range | ≤ (0,81 x Sn) mm |
| Correction factors | St37 = 1; Al = 0.3; stainless steel = 0.7; Ms = 0.4 |
| Repeatability | ≤ 2 % of full scale |
| Temperaturdrift | 10 % |
| Hysteresis | 3…15 % |
| Ambient temperature | -25…+70 °C |
| **Operating voltage** | 20…250 VAC |
| Operating voltage | 10…300VDC |
| AC rated operational current | ≤ 400 mA |
| DC rated operational current | ≤ 300 mA |
| Frequency | ≥ 50…≤ 60 Hz |
| Residual current | ≤ 1.7 mA |
| Rated insulation voltage | ≤ 1.5 kV |
| Surge current | ≤ 8 A (≤ 10 ms max. 5 Hz) |
| Voltage drop at $I_e$ | ≤ 6 V |
| Output function | 2-wire, NC contact |
| Smallest operating current $I_m$ | ≤ 3 mA |
| Switching frequency | 0.02 kHz |
| **Design** | threaded barrel, M18 x 1 |
| Dimensions | 82 mm |
| Housing material | metal, CuZn, chrome-plated |
| Material active face | Plastic, PA |
| Max. tightening torque housing nut | 25 Nm |
| Connection | male, 7/8" |
| Vibration resistance | 55 Hz (1 mm) |
| Shock resistance | 30 g (11 ms) |
| Protection class | IP67 |
| MTTF | 2283 years acc. to SN 29500 (Ed. 99) 40 °C |
| **Switching state** | LED red |

Edition • 2013-12-21T12:38:42+01:00


Hans Turck GmbH & Co.KG ● D-45472 Mülheim an der Ruhr ● Witzlebenstraße 7 ● Tel. 0208 4952-0 ● Fax 0208 4952-264 ● more@turck.com ● www.turck.com

| | |
|---|---|
| **Distance D** | 3 x B |
| Distance W | 3 x Sn |
| Distance T | 3 x B |
| Distance S | 1.5 x B |
| Distance G | 6 x Sn |
| Distance N | 2 x Sn |

| | |
|---|---|
| **Diameter of the active area B** | Ø 18 mm |

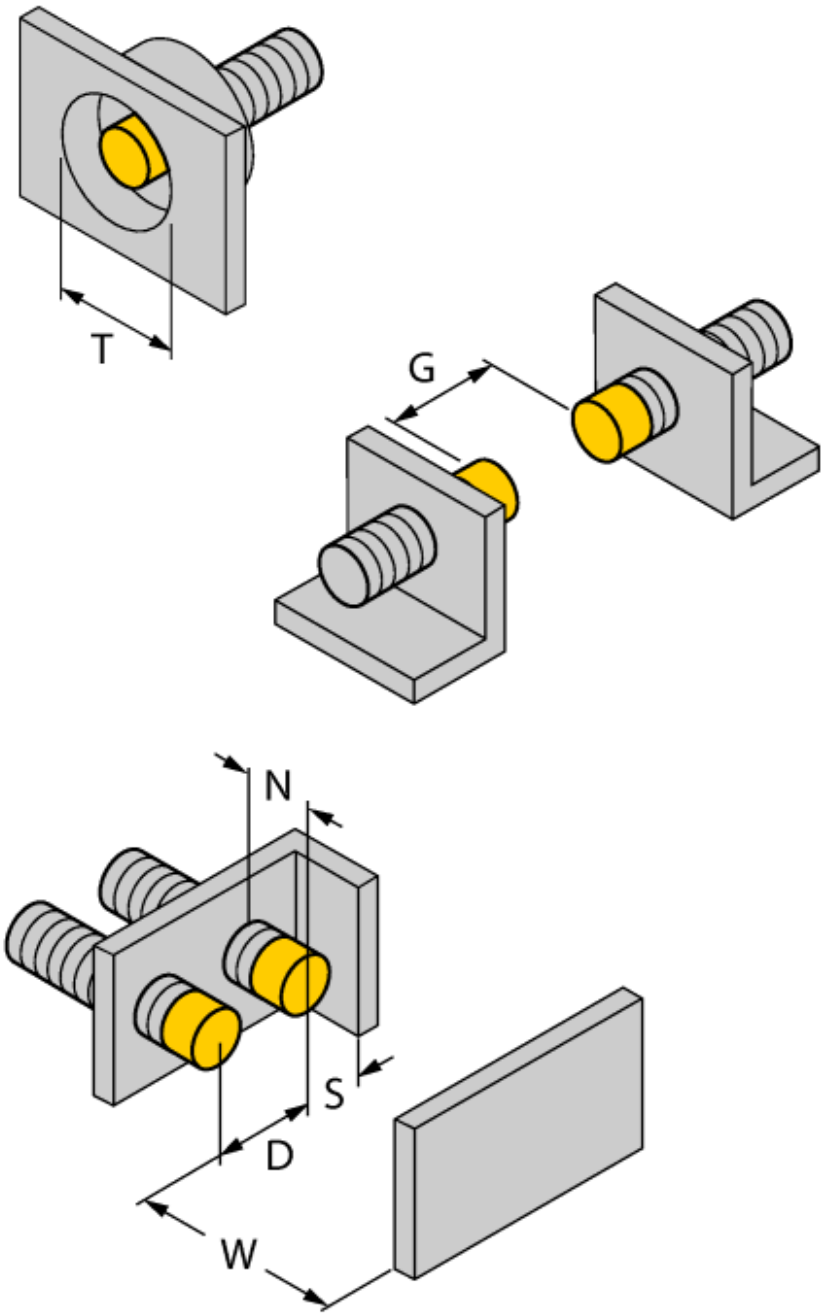


Edition • 2013-12-21T12:38:42+01:00

## Accessories

| Type code | Ident no. | Description | Dimension drawing |
|---|---|---|---|
| MW-18 | 6945004 | Mounting bracket for threaded barrel devices; material: Stainless steel A2 1.4301 (AISI 304) | 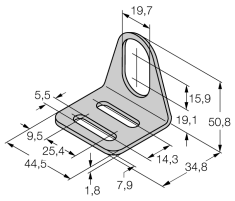  |
| BSS-18 | 6901320 | Mounting bracket for smooth and threaded barrel devices; material: Polypropylene | 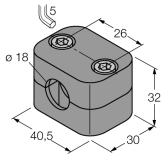  |

Edition • 2013-12-21T12:38:42+01:00