Inductive sensor
With extended temperature range
Bi5-P18SK-AD4X/S80-S277

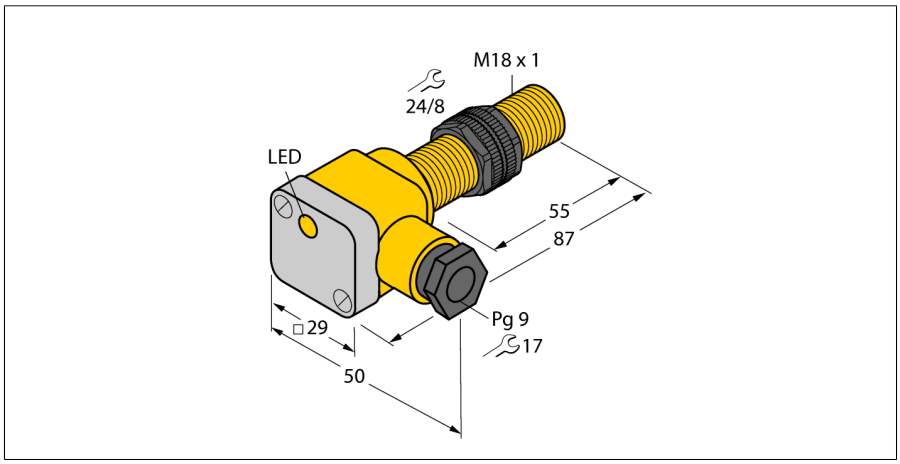

- **Threaded barrel, M18 x 1**
- **Plastic, PA12-GF30-V0**
- **Temperatures up to +80 °C**
- **DC 2-wire, 10…65 VDC**
- **NO contact**
- **Terminal chamber**

Wiring diagram

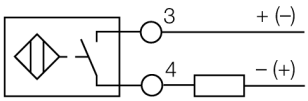

Type code	Bi5-P18SK-AD4X/S80-S277
Ident no.	4456501
Rated switching distance Sn	5 mm
Mounting conditions	flush
Assured switching distance	≤ (0,81 x Sn) mm
Correction factors	St37 = 1; Al = 0.3; stainless steel = 0.7; Ms = 0.4
Repeatability	≤ 2 % of full scale
Temperature drift	≤ ± 10 %
	≤ ± 20 %, ≥ +70 °C
Hysteresis	1…15 %
Ambient temperature	-25…+80 °C
Operating voltage	10…65VDC
Residual ripple	≤ 10 % U_{ss}
DC rated operational current	≤ 100 mA
Residual current	≤ 0.6 mA
Rated insulation voltage	≤ 0.5 kV
Short-circuit protection	yes/ cyclic
Voltage drop at I_e	≤ 5 V
Smallest operating current I_m	≥ 3 mA
Switching frequency	0.02 kHz
Construction	threaded barrel, M18 x 1
Dimensions	87 mm
Housing material	plastic, PA
Terminal chamber cover material	plastic, Ultem
Terminal chamber housing material	plastic, plastic, PA12-GF20
Material active area	plastic, PA
Max. tightening torque housing nut	2 Nm
Connection	Terminal chamber
Clamping ability	≤ 2.5 mm²
Cable external diameter	4.5…8mm
Vibration resistance	55 Hz (1 mm)
Shock resistance	30 g (11 ms)
IP Rating	IP67
MTTF	6354 years acc. to SN 29500 (Ed. 99) 20 °C
Switching state	LED yellow
Included in delivery	cable gland; 2x plastic seals

Functional principle

Inductive sensors detect metal objects contactless and wear-free. For this purpose they use a high-frequency electromagnetic AC field that interacts with the target. The sensors hosting a ferrite core coil generate the AC field through an LC resonant circuit.

Special versions are available for ambient temperatures between -40°C and +250°C.

Edition • 2015-07-28T00:02:51+02:00

Inductive sensor
With extended temperature range
Bi5-P18SK-AD4X/S80-S277

Distance D	2 x B
Distance W	3 x Sn
Distance T	3 x B
Distance S	1.5 x B
Distance G	6 x Sn

Diameter of the active area B	Ø 18 mm

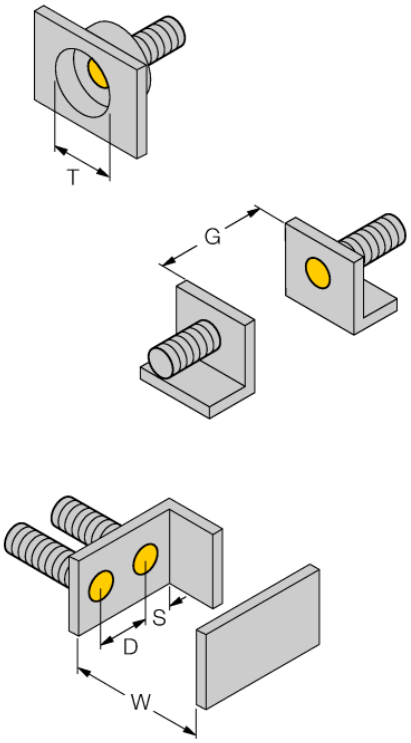

Edition • 2015-07-28T00:02:51+02:00

Hans Turck GmbH & Co.KG ● D-45472 Mülheim an der Ruhr ● Witzlebenstraße 7 ● Tel. 0208 4952-0 ● Fax 0208 4952-264 ● more@turck.com ● www.turck.com

Accessories

Type code	Ident no.	Description	Design
QM-18	6945102	Quick-mount bracket with dead-stop; material: Chrome-plated brass Male thread M24 x 1.5. Note: The switching distance of proximity switches can be reduced by the use of quick-mount brackets.	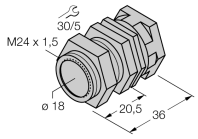
BST-18B	6947214	Fixing clamp for threaded barrel devices, with dead-stop; material: PA6	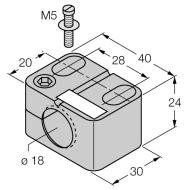
MW-18	6945004	Mounting bracket for threaded barrel devices; material: Stainless steel A2 1.4301 (AISI 304)	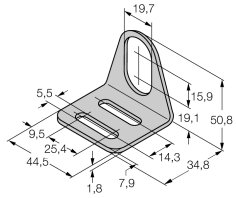
BSS-18	6901320	Mounting bracket for smooth and threaded barrel devices; material: Polypropylene	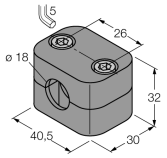

Edition • 2015-07-28T00:02:51+02:00