NI20-CP40-AD4X/S85
Inductive Sensor – With Increased Temperature Range

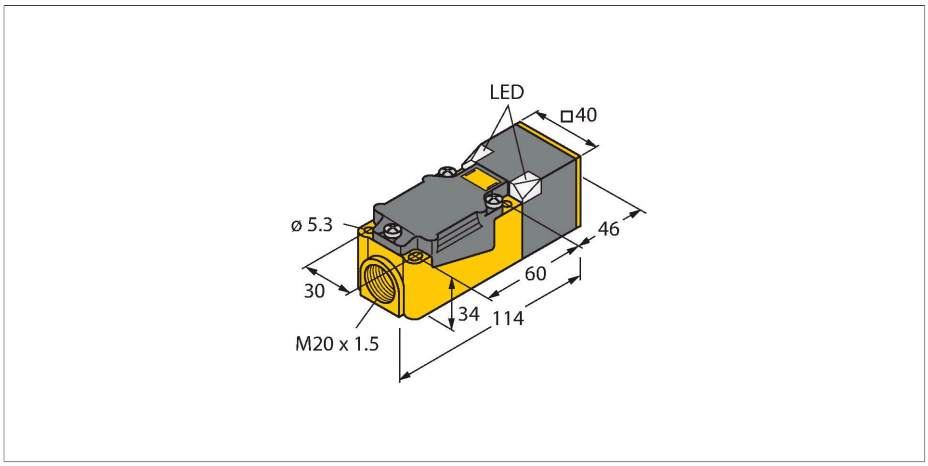

Features

- Rectangular, height 40 mm
- Variable orientation of active face in 9 directions
- Plastic, PBT-GF30-V0
- High luminance corner LEDs
- Optimum view on supply voltage and switching state from any position
- Temperatures up to +85 °C
- DC 2-wire, 10…65 VDC
- NO contact
- Terminal chamber

Wiring diagram

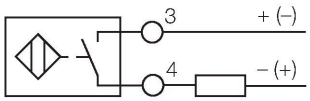

Functional principle

Inductive sensors detect metal objects contactless and wear-free. For this purpose they use a high-frequency electromagnetic AC field that interacts with the target. The sensors hosting a ferrite core coil generate the AC field through an LC resonant circuit.
Special versions are available for ambient temperatures between -60°C and +250°C.

Technical data

Type	NI20-CP40-AD4X/S85
ID	4466103
Special version	S85 corresponds to: Maximum ambient temperature = 85 °C
General data	
Rated switching distance	20 mm
Mounting conditions	Non-flush
Secured operating distance	≤ (0.81 × Sn) mm
Correction factors	St37 = 1; Al = 0.3; stainless steel = 0.7; Ms = 0.4
Repeat accuracy	≤ 2 % of full scale
	≤ ± 20 %, ≥ +70 °C
Hysteresis	1…15 %
Electrical data	
Operating voltage	10…65 VDC
Residual ripple	≤ 10 % U_{ss}
DC rated operational current	≤ 100 mA
Residual current	≤ 0.6 mA
Isolation test voltage	≤ 0.5 kV
Short-circuit protection	yes / Cyclic
Voltage drop at I_e	≤ 5 V
Wire breakage/Reverse polarity protection	Complete
Output function	2-wire, NO contact, 2-wire
Smallest operating current	≥ 3 mA
Switching frequency	0.15 kHz
Mechanical data	
Design	Rectangular, CP40

NI20-CP40-AD4X/S85| 23-11-2023 07-26 | Technical modifications reserved

Technical data

Dimensions	114 x 40 x 40 mm
Housing material	Plastic, PBT-GF30-V0, Black
Active area material	Plastic, PBT-GF30-V0, yellow
Electrical connection	Terminal chamber
Clamping ability	≤ 2.5 mm²
Environmental conditions	
Ambient temperature	-25…+85 °C
Vibration resistance	55 Hz (1 mm)
Shock resistance	30 g (11 ms)
Protection class	IP67
Power-on indication	2 × LEDs, Green
Switching state	2 × LEDs, Yellow

Mounting instructions

Mounting instructions/Description

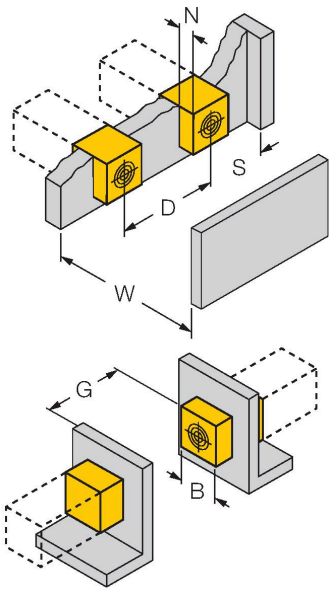

Distance D	3 x B
Distance W	3 x Sn
Distance S	1.5 x B
Distance G	6 x Sn
Distance N	1 x B
Width active area B	40 mm

Accessories

STRM M20X1.5 SCHWARZ	6965902

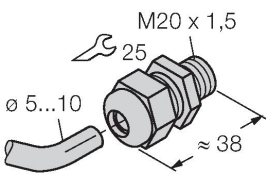

M20 × 1.5 cable gland

JS025/037	69429

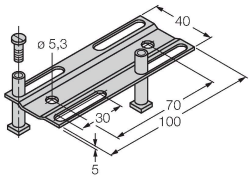

Adjusting bar for rectangular housings CK/CP40; material: VA 1.4301

NI20-CP40-AD4X/S85| 23-11-2023 07-26 | Technical modifications reserved

BSS-CP40	6901318

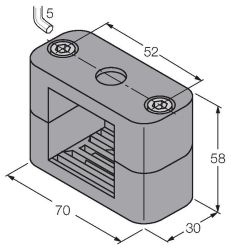

Mounting clamp for rectangular housings 40 x 40 mm; material: Polypropylene

NI20-CP40-AD4X/S85| 23-11-2023 07-26 | Technical modifications reserved