Inductive sensor
BI1,5-EM08-VP6X 12M

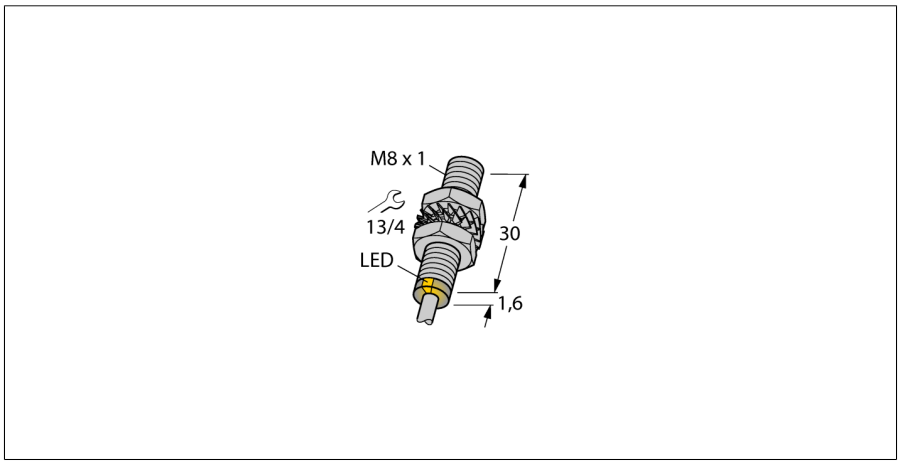

- **Threaded barrel, M8 x 1**
- **Stainless steel, 1.4427 SO**
- **DC 4-wire, 10…30 VDC**
- **Changeover contact, PNP output**
- **Cable connection**

Wiring diagram

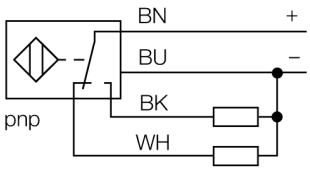

Type code	BI1,5-EM08-VP6X 12M
Ident no.	4602424
Rated switching distance Sn	1.5 mm
Mounting conditions	flush
Assured switching distance	≤ (0,81 x Sn) mm
Correction factors	St37 = 1; Al = 0.3; stainless steel = 0.7; Ms = 0.4
Repeatability	≤ 2 % of full scale
Temperature drift	≤ ± 10 %
Hysteresis	3…15 %
Ambient temperature	-25…+70 °C
Operating voltage	10…30VDC
Residual ripple	≤ 10 % U_{ss}
DC rated operational current	≤ 150 mA
No-load current I_0	≤ 15 mA
Residual current	≤ 0.1 mA
Rated insulation voltage	≤ 0.5 kV
Short-circuit protection	yes/ cyclic
Voltage drop at I_e	≤ 1.8 V
Wire breakage / Reverse polarity protection	yes/ complete
Output function	4-wire, changover contact, PNP
Switching frequency	2 kHz
Construction	threaded barrel, M8 x 1
Dimensions	31.6 mm
Housing material	stainless steel, 1.4427 SO
Material active area	plastic, PA
End cap	Plastic, PA12
Max. tightening torque housing nut	5 Nm
Connection	cable
Cable quality	3 mm, grey, Lif9Y-11Y, PUR, 12m
Cable cross section	4 x 0.14 mm^2
Vibration resistance	55 Hz (1 mm)
Shock resistance	30 g (11 ms)
IP Rating	IP67
MTTF	2283 years acc. to SN 29500 (Ed. 99) 40 °C
Switching state	LED yellow

Functional principle

Inductive sensors detect metal objects contactless and wear-free. For this, they use a high-frequency electromagnetic AC field that interacts with the target. Inductive sensors generate this field via an RLC circuit with a ferrite coil.

Edition • 2015-07-28T00:21:09+02:00

Distance D	2 x B
Distance W	3 x Sn
Distance T	3 x B
Distance S	1.5 x B
Distance G	6 x Sn

Diameter of the active area B	Ø 8 mm

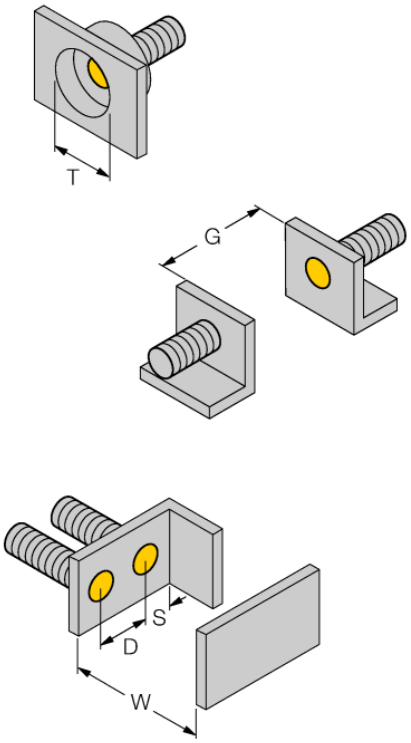

Edition • 2015-07-28T00:21:09+02:00

Accessories

Type code	Ident no.	Description	Design
QM-08	6945100	Quick-mount bracket with dead-stop, chrome-plated brass, male thread M12 x 1. Note: The switching distance of proximity switches may be reduced through the use of quick-mount brackets.	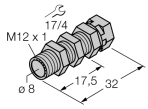
BST-08B	6947210	Fixing clamp for threaded barrel devices, with dead-stop; material: PA6	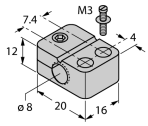
MW-08	6945008	Mounting bracket for threaded barrel devices; material: Stainless steel A2 1.4301 (AISI 304)	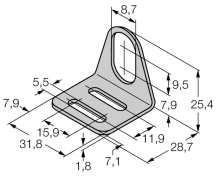
BSS-08	6901322	Mounting bracket for smooth and threaded barrel devices; material: Polypropylene	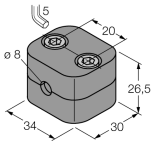

Edition • 2015-07-28T00:21:09+02:00