Inductive sensor
With increased switching distance
Bi1,5-EH04-AP6X-0,3-PSG3M

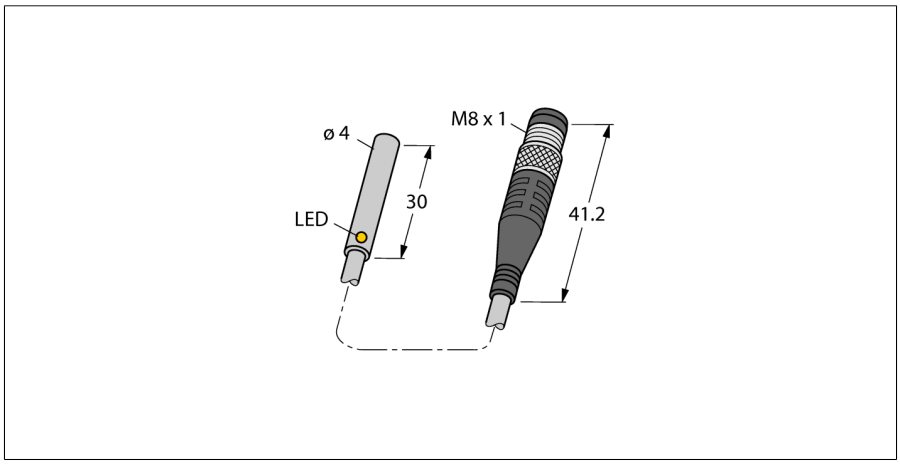

- **Smooth barrel, Ø 4 mm**
- **Stainless steel, 1.4404**
- **Large sensing range**
- **DC 3-wire, 10…30 VDC**
- **NO contact, PNP output**
- **M8 x 1 male connector**

Wiring diagram

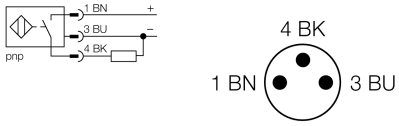

Type code	Bi1,5-EH04-AP6X-0,3-PSG3M
Ident no.	4609551
Rated switching distance Sn	1.5 mm
	see mounting instructions
Mounting conditions	flush
Assured switching distance	≤ (0,81 x Sn) mm
Correction factors	St37 = 1; Al = 0.3; stainless steel = 0.7; Ms = 0.4
Repeatability	≤ 2 % of full scale
Temperature drift	≤ ± 10 %
Hysteresis	3…15 %
Ambient temperature	0…+70 °C
Operating voltage	10…30VDC
Residual ripple	≤ 10 % U_{ss}
DC rated operational current	≤ 100 mA
No-load current I_0	≤ 15 mA
Residual current	≤ 0.1 mA
Rated insulation voltage	≤ 0.5 kV
Short-circuit protection	yes/ cyclic
Voltage drop at I_e	≤ 1.8 V
Wire breakage / Reverse polarity protection	yes/ complete
Output function	3-wire, NO contact, PNP
Switching frequency	3 kHz
Construction	smooth barrel, 4 mm
Dimensions	30 mm
Housing material	stainless steel, V4A (1.4404)
Material active area	plastic, PET-GF20
Material coupling nut	metal, CuZn, nickel-plated
Connection	male, M8 x 1
Cable quality	3 mm, grey, Lif9Y-11Y, PUR, 0.3m
	Suited for E-ChainSystems® acc. to manufacturers declaration H1063M
Cable cross section	3 x 0.14 mm^2
Vibration resistance	55 Hz (1 mm)
Shock resistance	30 g (11 ms)
IP Rating	IP67
MTTF	2283 years acc. to SN 29500 (Ed. 99) 40 °C
Switching state	LED yellow

Functional principle

Inductive sensors detect metal objects contactless and wear-free. For this, they use a high-frequency electromagnetic AC field that interacts with the target. Inductive sensors generate this field via an RLC circuit with a ferrite coil.

Edition • 2015-07-28T00:33:25+02:00

Inductive sensor
With increased switching distance
Bi1,5-EH04-AP6X-0,3-PSG3M

Distance D	2 x B
Distance W	3 x Sn
Distance T	3 x B
Distance S	1.5 x B
Distance G	6 x Sn
Distance N	2 mm

Diameter of the active area B	Ø 4 mm

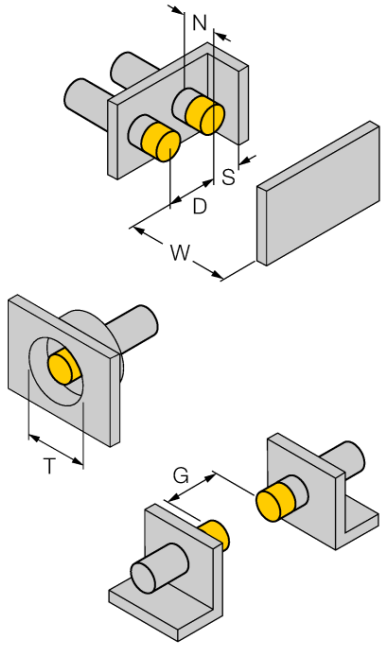

Edition • 2015-07-28T00:33:25+02:00

Hans Turck GmbH & Co.KG ● D-45472 Mülheim an der Ruhr ● Witzlebenstraße 7 ● Tel. 0208 4952-0 ● Fax 0208 4952-264 ● more@turck.com ● www.turck.com

Accessories

Type code	Ident no.	Description	Design
BS 540	69475	Fixing clamp; material mounting block: Anodized aluminium; clamp sleeve: Steel	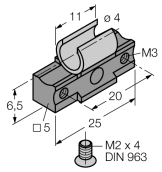
MBS40	69477	Fixing clamp; material mounting block: Anodized aluminium	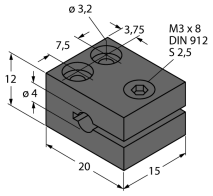

Edition • 2015-07-28T00:33:25+02:00