Inductive sensor
BI1-EG05-AN6X-0,61-RS4T

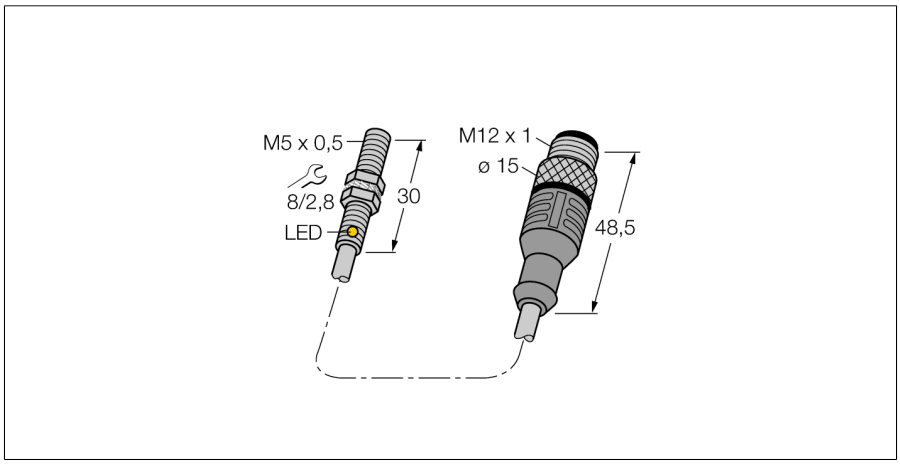

- **Threaded barrel, M5 x 0,5**
- **Stainless steel, 1.4301**
- **3-wire DC, 10…30 VDC**
- **NO contact, NPN output**
- **Male M12 x 1**

Wiring diagram

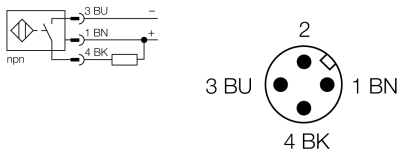

Type code	BI1-EG05-AN6X-0,61-RS4T
Ident no.	4609889
Rated operating distance Sn	1 mm
Mounting condition	flush
Assured sensing range	≤ (0,81 x Sn) mm
Correction factors	St37 = 1; Al = 0.3; stainless steel = 0.7; Ms = 0.4
Repeatability	≤ 2 % of full scale
Temperaturdrift	10 %
Hysteresis	3…15 %
Ambient temperature	-25…+70 °C
Operating voltage	10…30VDC
Residual ripple	≤ 10 % U_{ss}
DC rated operational current	≤ 100 mA
No-load current I_0	≤ 15 mA
Residual current	≤ 0.1 mA
Rated insulation voltage	≤ 0.5 kV
Short-circuit protection	yes/ cyclic
Voltage drop at I_e	≤ 1.8 V
Wire breakage / Reverse polarity protection	yes/ complete
Output function	3-wire, NO contact, NPN
Switching frequency	3 kHz
Design	threaded barrel, M5 x 0.5
Dimensions	30 mm
Housing material	stainless steel, 1.4427 SO
Material active face	Plastic, PBT
Material coupling nut	metal, CuZn, nickel-plated
Max. tightening torque housing nut	5 Nm
Connection	male, M12 x 1
Cable quality	3 mm, LifYY-11Y, PUR, 0.61 m
Cable cross section	3 x 0.14 mm^2
Vibration resistance	55 Hz (1 mm)
Shock resistance	30 g (11 ms)
Protection class	IP67
MTTF	2283 years acc. to SN 29500 (Ed. 99) 40 °C
Switching state	LED yellow

Functional principle

Inductive sensors detect metal objects contactless and wear-free. For this, they use a high-frequency electromagnetic AC field that interacts with the target. Inductive sensors generate this field via an RLC circuit with a ferrite coil.

Edition • 2013-12-21T13:42:22+01:00

Hans Turck GmbH & Co.KG ● D-45472 Mülheim an der Ruhr ● Witzlebenstraße 7 ● Tel. 0208 4952-0 ● Fax 0208 4952-264 ● more@turck.com ● www.turck.com

Inductive sensor
BI1-EG05-AN6X-0,61-RS4T

Distance D	2 x B
Distance W	3 x Sn
Distance T	3 x B
Distance S	1.5 x B
Distance G	6 x Sn

Diameter of the active area B	Ø 5 mm

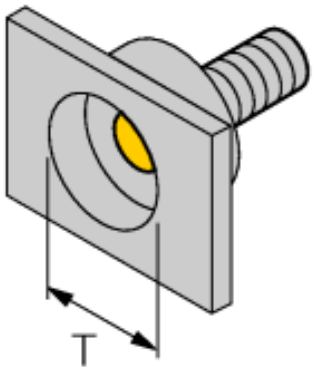

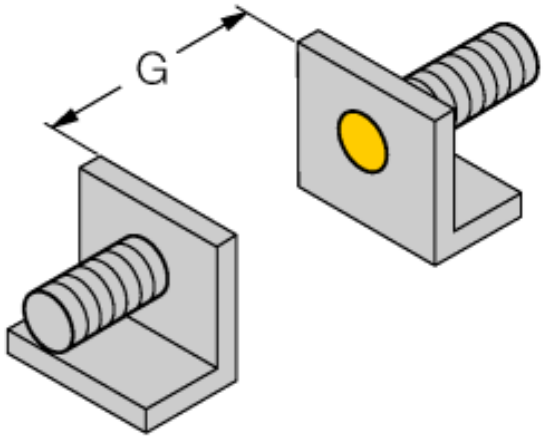

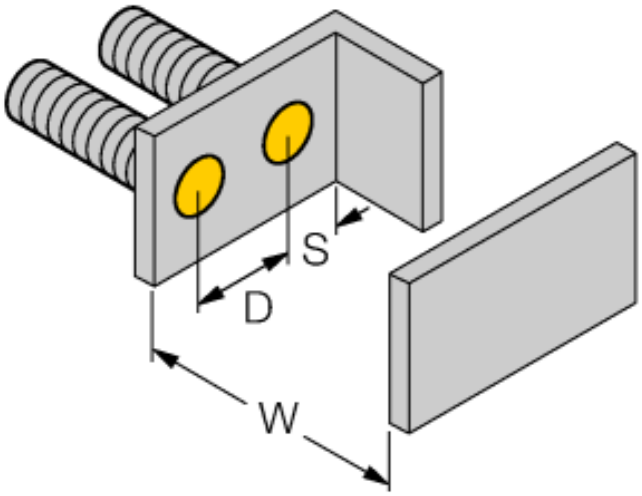

Edition • 2013-12-21T13:42:22+01:00

Hans Turck GmbH & Co.KG ● D-45472 Mülheim an der Ruhr ● Witzlebenstraße 7 ● Tel. 0208 4952-0 ● Fax 0208 4952-264 ● more@turck.com ● www.turck.com