Inductive sensor
For harsh environments and temperatures up to 120°C
NI15-EM30D-VP6X/S120 7M

Industrial Automation

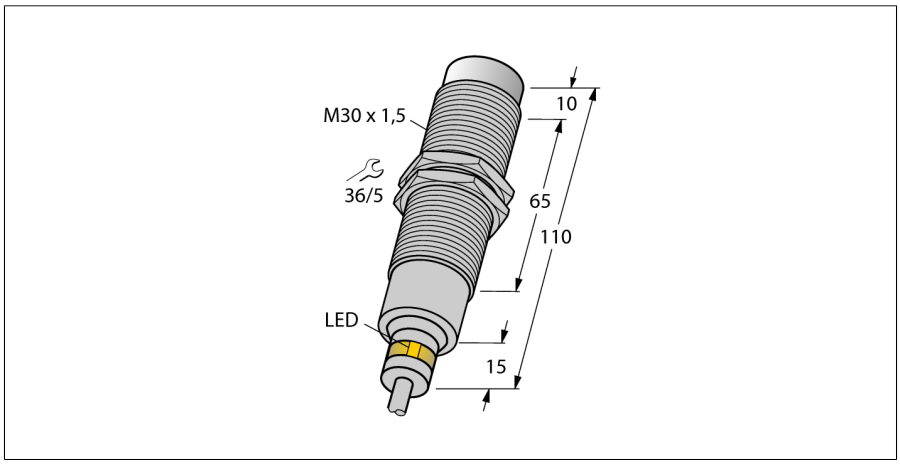

- **Threaded barrel, M30 x 1.5**
- **Stainless steel, 1.4571**
- **Viton sealing ring**
- **Protection classes IP68 - IP69K**
- **Temperatures up to +120 °C**
- **PTFE front cap**
- **Climate-proof**
- **Resistance to cooling lubricants, cutting and grinding oils**
- **For the food industry**
- **DC 4-wire, 10…30 VDC**
- **Changeover contact, PNP output**
- **Cable connection**

Type code	NI15-EM30D-VP6X/S120 7M
Ident no.	4617411
Rated switching distance Sn	15 mm
Mounting conditions	non-flush
Assured switching distance	≤ (0,81 x Sn) mm
Correction factors	St37 = 1; Al = 0.3; stainless steel = 0.7; Ms = 0.4
Repeatability	≤ 2 % of full scale
Temperature drift	≤ ± 10 %
	≤ ± 20 %, ≥ +70 °C
Hysteresis	3…15 %
Ambient temperature	-25…+120 °C
Operating voltage	10…30VDC
Residual ripple	≤ 10 % U_{ss}
DC rated operational current	≤ 200 mA
Rated operational current	see derating curve
No-load current I_0	≤ 15 mA
Residual current	≤ 0.1 mA
Rated insulation voltage	≤ 0.5 kV
Short-circuit protection	yes/ cyclic
Voltage drop at I_e	≤ 1.8 V
Wire breakage / Reverse polarity protection	yes/ complete
Output function	4-wire, changover contact, PNP
Switching frequency	0.1 kHz
Construction	threaded barrel, M30 x 1.5
Dimensions	110 mm
Housing material	stainless steel, V4A (1.4571)
Material active area	plastic, PTFE
End cap	Plastic, PTFE
Admissible pressure on front cap	≤ 10 bar
Max. tightening torque housing nut	75 Nm
Connection	cable
Cable quality	3.7 mm, PTFE, FEP, 7m
Cable cross section	4 x 0.25 mm²
Vibration resistance	55 Hz (1 mm)
Shock resistance	30 g (11 ms)
IP Rating	IP68 / IP69K
Switching state	LED yellow

Wiring diagram

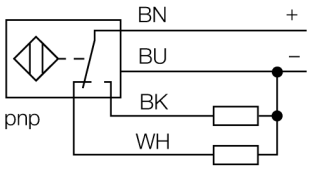

Functional principle

TURCK offers leak-proof sensors for the food industry and machine engineering that are resistant to cleaning agents, cooling lubricants, cutting and grinding oils. They are made for rough environmental conditions and not only meet but even exceed the requirements of the protection classes IP68 and IP69.

Special versions are available for ambient temperatures between -60°C and +250°C.

Derating curve

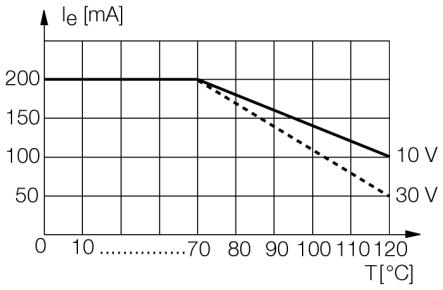

Edition • 2015-07-28T01:00:15+02:00

 Hans Turck GmbH & Co.KG ● D-45472 Mülheim an der Ruhr ● Witzlebenstraße 7 ● Tel. 0208 4952-0 ● Fax 0208 4952-264 ● more@turck.com ● www.turck.com

Inductive sensor
For harsh environments and temperatures up to 120°C
NI15-EM30D-VP6X/S120 7M

Distance W	3 x Sn
Distance T	3 x B
Distance S	1.5 x B
Distance G	6 x Sn
Distance N	20 mm

Diameter of the active area B	Ø 30 mm

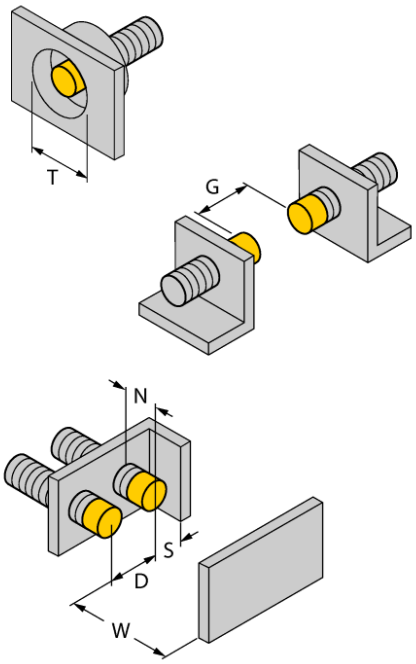

Edition • 2015-07-28T01:00:15+02:00

Hans Turck GmbH & Co.KG ● D-45472 Mülheim an der Ruhr ● Witzlebenstraße 7 ● Tel. 0208 4952-0 ● Fax 0208 4952-264 ● more@turck.com ● www.turck.com

Accessories

Type code	Ident no.	Description	Design
QM-30	6945103	Quick-mount bracket with dead-stop; material: Chrome-plated brass Male thread M36 x 1.5. Note: The switching distance of proximity switches can be reduced by the use of quick-mount brackets.	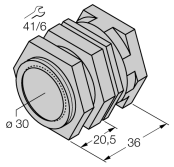
MW-30	6945005	Mounting bracket for threaded barrel devices; material: Stainless steel A2 1.4301 (AISI 304)	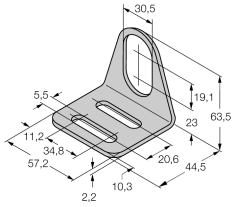

Edition • 2015-07-28T01:00:15+02:00

 Hans Turck GmbH & Co.KG ● D-45472 Mülheim an der Ruhr ● Witzlebenstraße 7 ● Tel. 0208 4952-0 ● Fax 0208 4952-264 ● more@turck.com ● www.turck.com