Magnetic field sensor for pneumatic cylinders BIM-AKT-AP6X

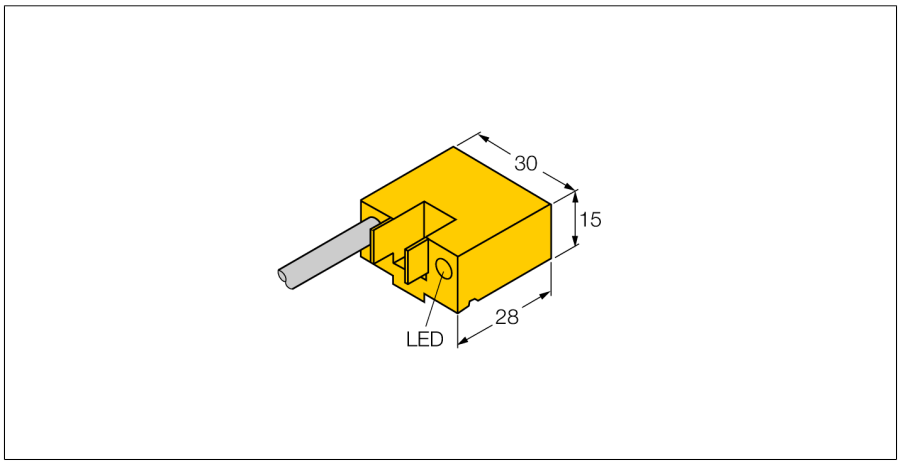

- **Rectangular, height 15mm**
- **Concentric active face**
- **Plastic, PA12-GF30**
- **Magnetic-inductive sensor**
- **DC 3-wire, 10…30 VDC**
- **NO contact, PNP output**
- **Cable connection**

Wiring diagram

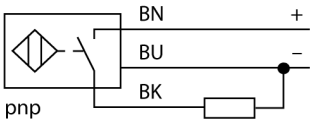

Type code	BIM-AKT-AP6X
Ident no.	46750
Pass speed	≤ 10 m/s
Repeatability	≥ ± 0.1 mm
Temperature drift	≤ 0.1 mm
Hysteresis	≤ 1 mm
Ambient temperature	-25…+70 °C
Operating voltage	10…30VDC
Residual ripple	≤ 10 % U_{ss}
DC rated operational current	≤ 200 mA
No-load current I_0	≤ 15 mA
Residual current	≤ 0.1 mA
Rated insulation voltage	≤ 0.5 kV
Short-circuit protection	yes/ cyclic
Voltage drop at I_e	≤ 1.8 V
Wire breakage / Reverse polarity protection	yes/ complete
Output function	3-wire, NO contact, PNP
Switching frequency	1 kHz
Construction	rectangular, AKT
Dimensions	28 x 30 x 15 mm
Housing material	plastic, PA
Material active area	plastic, PA
Connection	cable
Cable quality	4 mm, grey, LifYY, PVC, 2m
Cable cross section	3 x 0.25 mm²
Vibration resistance	55 Hz (1 mm)
Shock resistance	30 g (11 ms)
IP Rating	IP67
MTTF	2283 years acc. to SN 29500 (Ed. 99) 40 °C
Mounting on the following profiles	.
Cylindrical design	⃞
Switching state	LED yellow

Functional principle

Magnetic field sensors are activated by magnetic fields and are especially suited for piston position detection in pneumatic cylinders. Based on the fact that magnetic fields can permeate non-magnetizable metals, it is possible to detect a permanent magnet attached to the piston through the aluminium wall of the cylinder.

Edition • 2015-07-28T01:32:31+02:00

Edition • 2015-07-28T01:32:31+02:00

Accessories

Type code	Ident no.	Description	Design
KLA1	69700	Mounting on tie-rod cylinders; for cylinder diameters of 32… 50 mm; material: Anodized aluminium	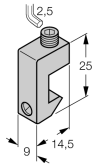
KLA3	69702	Mounting on tie-rod cylinders; for cylinder diameters of 32… 63 mm; material: Stainless steel	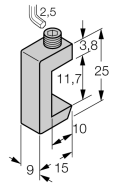
KLA2	69701	Mounting on tie-rod cylinders; for cylinder diameters of 40… 125 mm; material: Metal GdZn	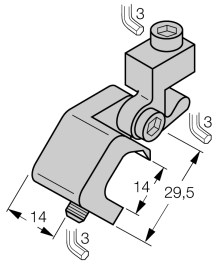

Edition • 2015-07-28T01:32:31+02:00