BIM-UNT-2AP6X-0.15/0.2-RSC4.4T/S1290
Magnetic Field Sensor – For Pneumatic Cylinders

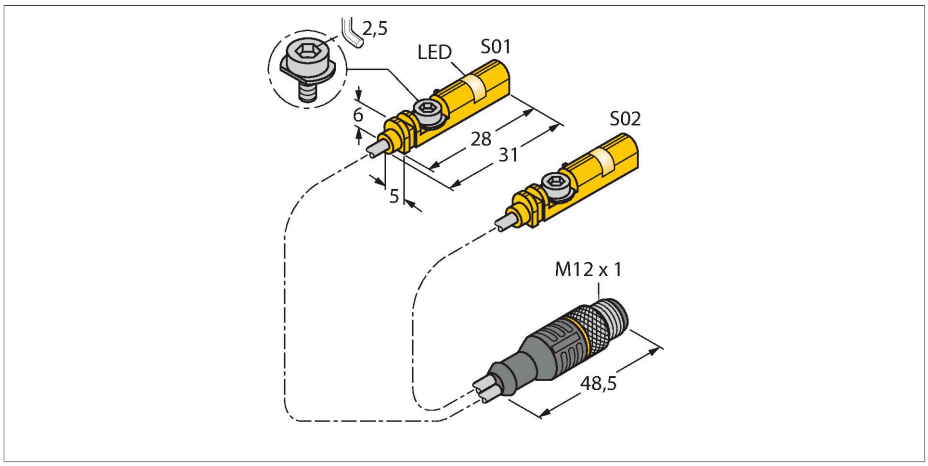

Technical data

Type	BIM-UNT-2AP6X-0.15/0.2-RSC4.4T/ S1290
ID	4685914
Remark to product	Two sensors with 0.15 m and 0.2 m cable on a connector
Special version	S1290 corresponds to: Two BIM-UNT-AP6X with a given cable length to an M12 connector, both BIM-UNT with screw according to S1153 definition (TUSA screw with 2.5 mm)
General data	
Pass speed	≤ 10 m/s
Repeatability	≤ ± 0.1 mm
Temperature drift	≤ 0.1 mm
Hysteresis	≤ 1 mm
Electrical data	
Operating voltage	10…30 VDC
Residual ripple	≤ 10 % U_{ss}
DC rated operational current	≤ 150 mA
No-load current	15 mA
Residual current	≤ 0.1 mA
Isolation test voltage	≤ 0.5 kV
Short-circuit protection	yes / Cyclic
Voltage drop at I_e	≤ 1.8 V
Wire breakage/Reverse polarity protection	yes / Complete
Output function	4-wire, NO contact, PNP
Switching frequency	1 kHz
Mechanical data	
Design	Rectangular, UNT

Features

- For T-groove cylinders without mounting accessories
- Optional accessories for mounting on other cylinder designs
- One-hand mounting possible
- Stable mounting
- Magneto-resistive sensor
- 2x NO contacts, PNP output
- DC 4-wire, 10…30 VDC

Wiring diagram

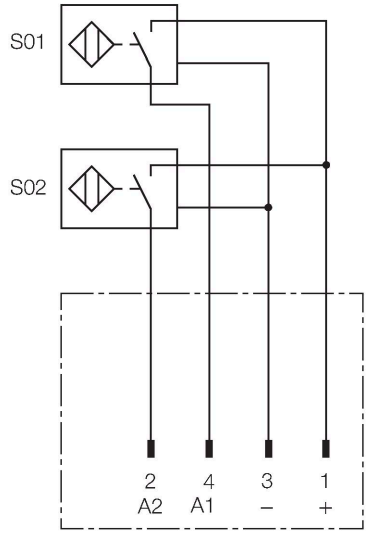

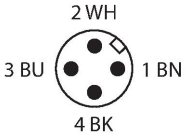

Functional principle

Magnetic field sensors are activated by magnetic fields and are used, in particular, for the detection of the piston position in pneumatic cylinders. As magnetic fields can permeate non-magnetizable metals, they detect a permanent magnet attached to the piston through the aluminium cylinder wall.

BIM-UNT-2AP6X-0.15/0.2-RSC4.4T/S1290 28-02-2023 13-16 | Technical modifications reserved

Technical data

Dimensions	28 x 5 x 6 mm
Housing material	Plastic, PP
Active area material	Plastic, PP
Tightening torque fixing screw	0.4 Nm
Electrical connection	Connector, M12 × 1
Cable quality	Ø 3 mm, Gray, Lif9Y-11Y, PUR
Core cross-section	4 x 0.14 mm^2
Environmental conditions	
Ambient temperature	-25…+70 °C
Vibration resistance	55 Hz (1 mm)
Shock resistance	30 g (11 ms)
Protection class	IP67
MTTF	2283 years acc. to SN 29500 (Ed. 99) 40 °C
Mounting on the following profiles	
Cylindrical design	
Switching state	2 × LEDs, Yellow/Yellow

Mounting instructions

Mounting instructions/Description

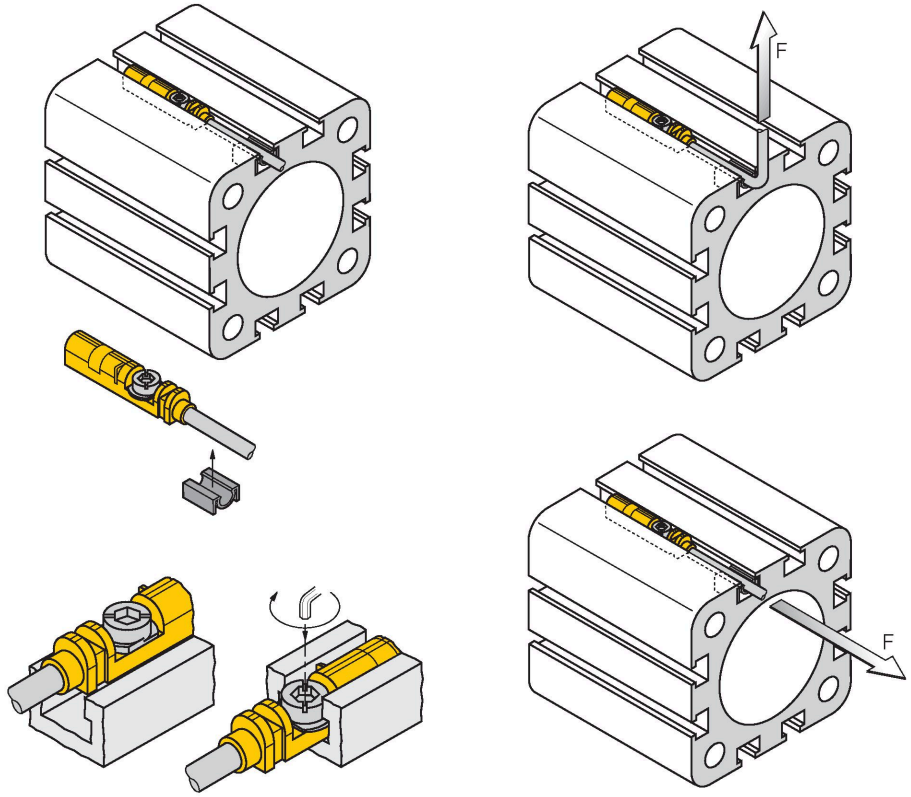

Thanks to the mounting lip, the sensor can be inserted into the groove from above with one hand. Mount the sensors as follows using the patented wing screw: The wing screw and the female thread feature a left-hand thread. Two small plastic lips keep the screw in position, ready-to-install. Turn the screw clockwise. The screw moves out of the thread and hits the upper grooves with the wings. The sensor is thus pressed down and locked in position. A few degrees up to approximately 1.5 turns of the screw with a slotted screwdriver (blade width 0.5 mm) or a 1.5 mm Allen key are sufficient to ensure vibration-proof fastening, depending on the shape of the slot. A tightening torque of 0.4 Nm is sufficient for safe mounting without damaging the cylinder. The sensor can now withstand an axial and radial tensile load of F=100N applied on the cable. A cable clip is included in the scope of delivery. It enables smooth cable routing in the groove and ensures that the cable is fastened as securely as possible. The corresponding accessories for mounting on other cylindrical housings must be ordered separately.

BIM-UNT-2AP6X-0.15/0.2-RSC4.4T/S129Q 28-02-2023 13-16 | Technical modifications reserved

Accessories

KLZ1-INT	6970410

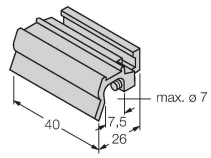

Accessories for mounting the sensors BIM-INT and BIM-UNT on tie-rod cylinders; cylinder diameter: 32… 40 mm; material: Aluminum; further mounting accessories for other cylinder diameters on request

KLZ2-INT	6970411

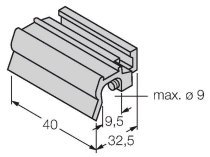

Accessories for mounting the sensors BIM-INT and BIM-UNT on tie-rod cylinders; Cylinder diameter: 50… 63 mm; material: Aluminium; Further mounting accessories for other cylinder diameters on request

UNT-STOPPER	4685751

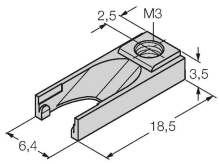

Accessories for finetuning the switchpoint on T-groove cylinders; snap-locked in the BIM-UNT fixture; suited for multiple use; material: plastic

KLRC-UNT1	6970626

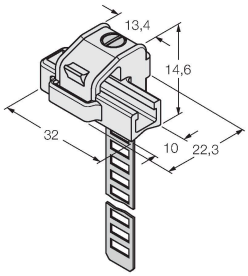

Mounting bracket for mounting magnetic field sensors on round cylinders; cylinder diameter: 8…25 mm; material: PA 6I/6T / nickel silver; fire-hazard classification acc. to UL94 - V2

KLRC-UNT2	6970627

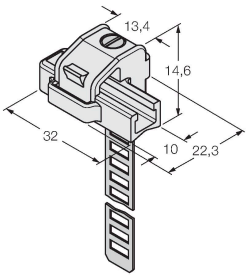

Mounting bracket for mounting magnetic field sensors on round cylinders; cylinder diameter: 25…63 mm; material: PA 6I/6T / nickel silver; fire-hazard classification acc. to UL94 - V2

KLRC-UNT3	6970628

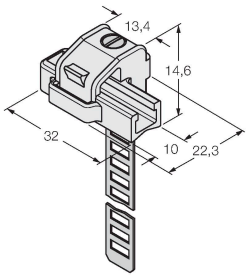

Mounting bracket for mounting magnetic field sensors on round cylinders; cylinder diameter: 63…130 mm; material: PA 6I/6T / nickel silver; fire-hazard classification acc. to UL94 - V2

KLRC-UNT4	6970629

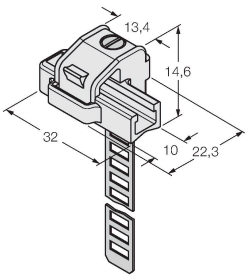

Mounting bracket for mounting magnetic field sensors on round cylinders; cylinder diameter: 130… 250 mm; material: PA 6I/6T / nickel silver; fire-hazard classification acc. to UL94 - V2

KLDT-UNT2	6913351

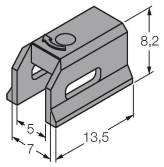

Mounting bracket for mounting magnetic field sensors on dovetail groove cylinders; groove width: 7 mm; material: PPS

KLDT-UNT3	6913352

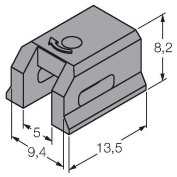

Mounting bracket for mounting magnetic field sensors on dovetail groove cylinders; groove width: 9.4 mm; material: PPS

KLDT-UNT6	6913355

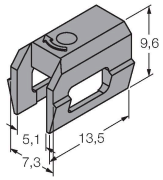

Mounting bracket for mounting magnetic field sensors on dovetail groove cylinders; groove width: 7.35 mm; material: PPS

BIM-UNT-2AP6X-0.15/0.2-RSC4.4T/S129Q 28-02-2023 13-16 | Technical modifications reserved