Magnetic field sensor
for pneumatic cylinders (magnetic-field immune)
BIM-S47SL-AP6X/S34 w/B9241-0

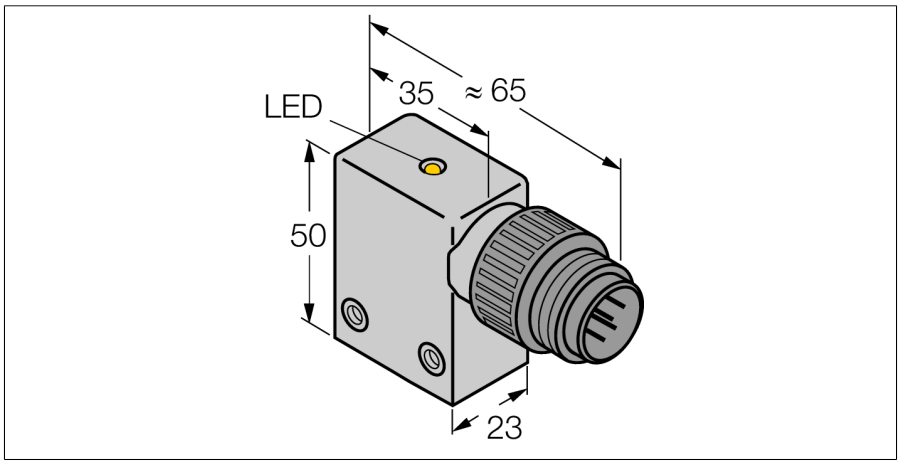

- **Rectangular, height 50mm**
- **Concentric active face**
- **Metal/plastic, Al/PBT-GF30-V0**
- **Magnetic-inductive sensor**
- **Weld resistant to AC fields of 50…60 Hz**
- **DC 3-wire, 10…30 VDC**
- **NO contact, PNP output**
- **Male connector, Rd24, (matching female connector B9241-0)**

Type code	BIM-S47SL-AP6X/S34 w/B9241-0
Ident no.	4686201
Special features	with field wireable cable coupling B9241-0
Repeatability	≥ ± 0.1 mm
Temperature drift	≤ 0.1 mm
Hysteresis	≤ 1 mm
Ambient temperature	-25…+70 °C
Operating voltage	10…30VDC
Residual ripple	≤ 10 % U_{ss}
DC rated operational current	≤ 200 mA
No-load current I_0	≤ 15 mA
Residual current	≤ 0.1 mA
Rated insulation voltage	≤ 0.5 kV
Short-circuit protection	yes/ cyclic
Voltage drop at I_e	≤ 1.8 V
Wire breakage / Reverse polarity protection	yes/ complete
Output function	3-wire, NO contact, PNP
Switching frequency	0.015 kHz
Design	rectangular, S47SL
Dimensions	65 x 23 x 50 mm
Housing material	metal, GD-AlSi 12
Material active face	Plastic, PBT
Connection	male, Rd24
Vibration resistance	55 Hz (1 mm)
Shock resistance	30 g (11 ms)
Protection class	IP67
MTTF	2283 years acc. to SN 29500 (Ed. 99) 40 °C
Mounting on the following profiles	.
Cylindrical design	◯

Wiring diagram

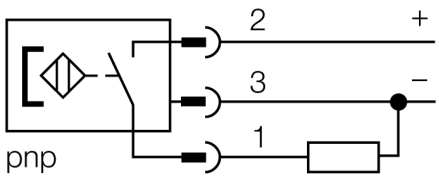

Functional principle

Magnetic field sensors are activated by magnetic fields and are especially suited for piston position detection in pneumatic cylinders. Based on the fact that magnetic fields can permeate non-magnetizable metals, it is possible to detect a permanent magnet attached to the piston through the aluminium wall of the cylinder.

Weld-field immune permaprox sensors "freeze" the switching status when detecting a magnetic AC field (50..60 Hz). Consequently, false switching operations are prevented during the welding process. When the AC field disappears, the sensors resume standard operation.

Edition • 2014-03-20T14:58:08+01:00

Hans Turck GmbH & Co.KG ● D-45472 Mülheim an der Ruhr ● Witzlebenstraße 7 ● Tel. 0208 4952-0 ● Fax 0208 4952-264 ● more@turck.com ● www.turck.com

Magnetic field sensor
for pneumatic cylinders (magnetic-field immune)
BIM-S47SL-AP6X/S34 w/B9241-0

Accessories

Type code	Ident no.	Description	Dimension drawing
KLU1	69694	Mounting on ◯ tie-rod cylinders; cylinder diameter 32…68 mm; material: Aluminum	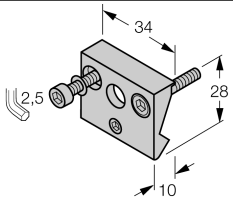
KLU2	69697	Mounting on ◯ tie-rod cylinders; cylinder diameter 40…200 mm; material: Aluminum	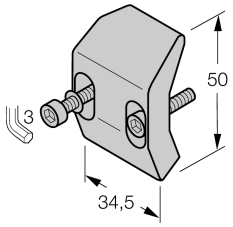
B9241-0	69065		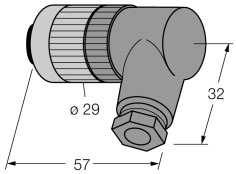

Edition • 2014-03-20T14:58:08+01:00

 Hans Turck GmbH & Co.KG ● D-45472 Mülheim an der Ruhr ● Witzlebenstraße 7 ● Tel. 0208 4952-0 ● Fax 0208 4952-264 ● more@turck.com ● www.turck.com