Magnetic field sensor
for pneumatic cylinders (magnetic-field immune)
BIM-S47SL-AP6X/S34

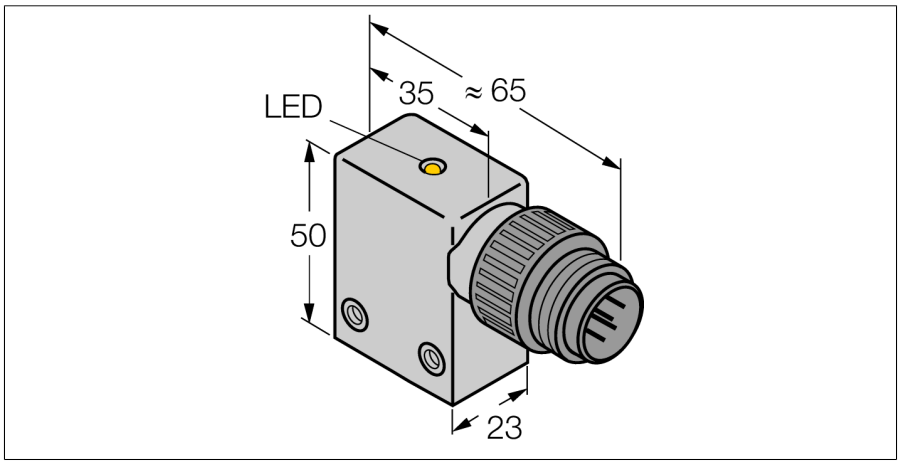

- **Rectangular, height 50mm**
- **Metal, GD-AlSi 12**
- **Magnetic-inductive sensor**
- **Weld resistant to AC fields of 50…60 Hz**
- **DC 3-wire, 10…30 VDC**
- **NO contact, PNP output**
- **Male connector, Rd24, (matching female connector B9241-0)**

Wiring Diagram

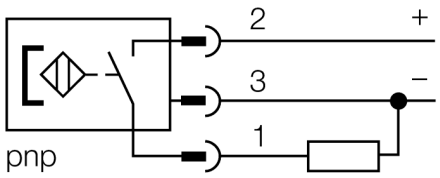

Type code	BIM-S47SL-AP6X/S34
Ident no.	46862
Pass speed	≤ 1 m/s
Repeatability	≥ ± 0.1 mm
Temperature drift	≤ 0.1 mm
Hysteresis	≤ 1 mm
Ambient temperature	-25…+70 °C
Operating voltage	10… 30VDC
Residual ripple	≤ 10 % U_{ss}
DC rated operational current	≤ 200 mA
No-load current I_0	≤ 15 mA
Residual current	≤ 0.1 mA
Rated insulation voltage	≤ 0.5 kV
Short-circuit protection	yes/ cyclic
Voltage drop at I_e	≤ 1.8 V
Wire breakage / Reverse polarity protection	yes/ complete
Output function	3-wire, NO contact, PNP
Switching frequency	0.015 kHz
Construction	rectangular, S47SL
Dimensions	65 x 23 x 50 mm
Housing material	Metal, GD-AlSi 12
Active area material	Plastic, PBT
Connection	Flange connector, Rd24
Vibration resistance	55 Hz (1 mm)
Shock resistance	30 g (11 ms)
Protection class	IP67
MTTF	2283 years acc. to SN 29500 (Ed. 99) 40 °C
Mounting on the following profiles	.
Cylindrical design	◯
Switching state	LED yellow

Functional principle

Magnetic field sensors are activated by magnetic fields and are used, in particular, for the detection of the piston position in pneumatic cylinders. As magnetic fields can permeate non-magnetizable metals, they detect a permanent magnet attached to the piston through the aluminium cylinder wall.

Weld-field immune permaprox sensors "freeze" the switching status when detecting a magnetic AC field (50…60 Hz). In this way, false switching operations are prevented during the welding process. When the AC field disappears, the sensors resume standard operation.

Edition • 2016-04-14T10:38:48+02:00

Magnetic field sensor
for pneumatic cylinders (magnetic-field immune)
BIM-S47SL-AP6X/S34

Accessories

Type code	Ident no.	Description	
KLU1	69694	Mounting on ◯ tie-rod cylinders; cylinder diameter 32…68 mm; material: Aluminum	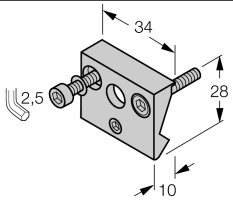
KLU2	69697	Mounting on ◯ tie-rod cylinders; cylinder diameter 40…200 mm; material: Aluminum	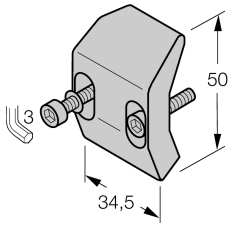
B9241-0	69065		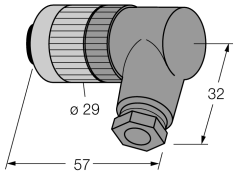

Edition • 2016-04-14T10:38:48+02:00

Hans Turck GmbH & Co.KG ● D-45472 Mülheim an der Ruhr ● Witzlebenstraße 7 ● Tel. 0208 4952-0 ● Fax 0208 4952-264 ● more@turck.com ● www.turck.com