Pressure transmitter, front-flush with current output (2-wire) PTK300R-24-LI3-H1140

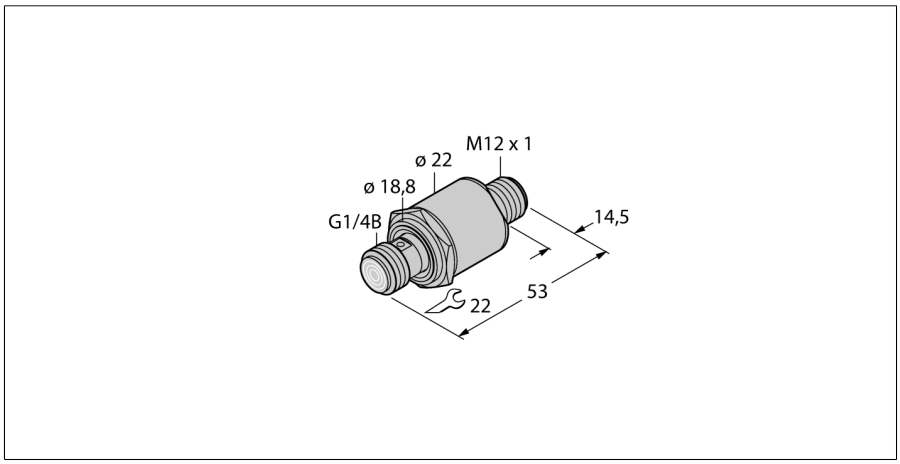

- **Compact and robust design**
- **Pressure connection with front-flush mounted diaphragm (stainless steel)**
- **Minimum influence of temperature on accuracy within the entire temperature range of -40…+125°C**
- **Excellent EMC properties**
- **Pressure range 0 … 300 bar rel.**

Wiring diagram

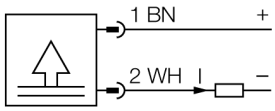

Functional principle

The pressure transmitters of the **PTK …-2** series operate with a thin-film measuring cell. The **front-flush pressure port** is directly welded to the transmitter. The voltage produced is made available as analog output signal, 4…20 mA (2-wire).

Type code	PTK300R-24-LI3-H1140
Ident no.	6831567
Relative pressure	0…300 bar rel.
Operating range	0…4351psi
Operating range	0…30MPa
Admissible overpressure	≤ 800 bar
Burst pressure	≥ 1200 bar
Response time	< 1 ms
Power supply	
Operating voltage	9…30VDC
Current consumption	≥ 4 mA
Short-circuit/reverse polarity protection	yes/ yes
Protection type and class	IP67/ III
Outputs	
Output 1	analog output
Analogue output	
Current output	4…20mA
Operating range	4…20 mA (2-wire)
Load	1.2
Accuracy LHR analog output	± 0.5 % of final value BSL
Temperature behaviour	
Medium temperature	-25…85 °C
Temperature coefficient zero point T_{k0}	± 0.2 % of full scale / 10 K
Temperature coefficient span T_{ks}	± 0.3 % of full scale / 10 K
Ambient conditions	
Ambient temperature	-25…85 °C
Storage temperature	-25…+85°C
Vibration resistance	3 x g (5-500-5 Hz, 10 cycles per axis, 1 oct/min), acc. to IEC 68-2-6
Shock resistance	30 g (11 ms) , according to IEC 61508
Housing	
Housing material	stainless steel, 1.4435 (316L)
material pressure connection	stainless steel A4 1.4435 (AISI 316L)
material pressure element	1.4548 (630)
Sealing material	FPM
Process connection	G ¼" male thread
Wrench size pressure connection / coupling nut	SW30
Connection	male, M12 x 1

Edition • 2015-07-28T04:47:22+02:00

Pressure transmitter, front-flush with current output (2-wire) PTK300R-24-LI3-H1140

Reference conditions acc. to IEC 61298-1	
temperature	15…25 °C
Atmospheric pressure	860…1060 hPa abs.
Humidity	45…75 % rel.
Auxiliary power	24 VDC

Edition • 2015-07-28T04:47:22+02:00

Pressure transmitter, front-flush with current output (2-wire) PTK300R-24-LI3-H1140

Wiring accessories

Type code	Ident no.	Description	Design
RKC4.4T-2/TEL	6625013	Connection cable, female M12, straight, 4-pin, cable length: 2 m, sheath material: PVC, black; cULus approval; other cable lengths and qualities available, see www.turck.com	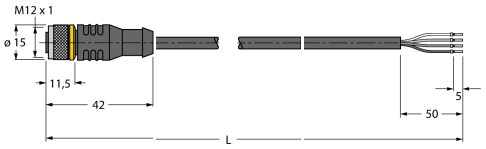
WKC4.4T-2/TEL	6625025	Connection cable, female M12, angled, 4-pin, cable length: 2 m, sheath material: PVC, black; cULus approval; other cable lengths and qualities available, see www.turck.com	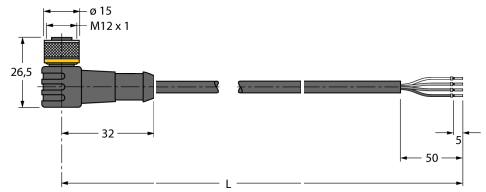
RKC4.4T-2/TXL	6625503	Connection cable, female M12, straight, 4-pin, cable length: 2 m, sheath material: PUR, black; cULus approval; other cable lengths and qualities available, see www.turck.com	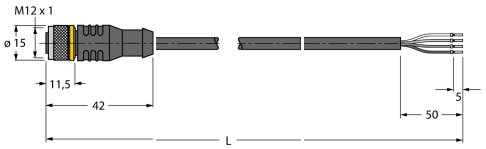
WKC4.4T-2/TXL	6625515	Connection cable, female M12, angled, 4-pin, cable length: 2 m, sheath material: PUR, black; cULus approval; other cable lengths and qualities available, see www.turck.com	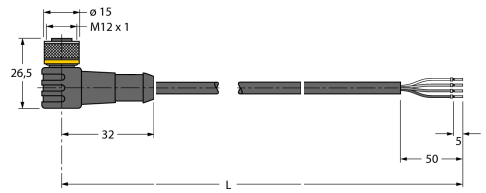

Edition • 2015-07-28T04:47:22+02:00

 Hans Turck GmbH & Co.KG ● D-45472 Mülheim an der Ruhr ● Witzlebenstraße 7 ● Tel. 0208 4952-0 ● Fax 0208 4952-264 ● more@turck.com ● www.turck.com