Flow monitoring
Immersion sensor with integrated processor
FCS-GL1/2A4-AP8X-H1141/D023

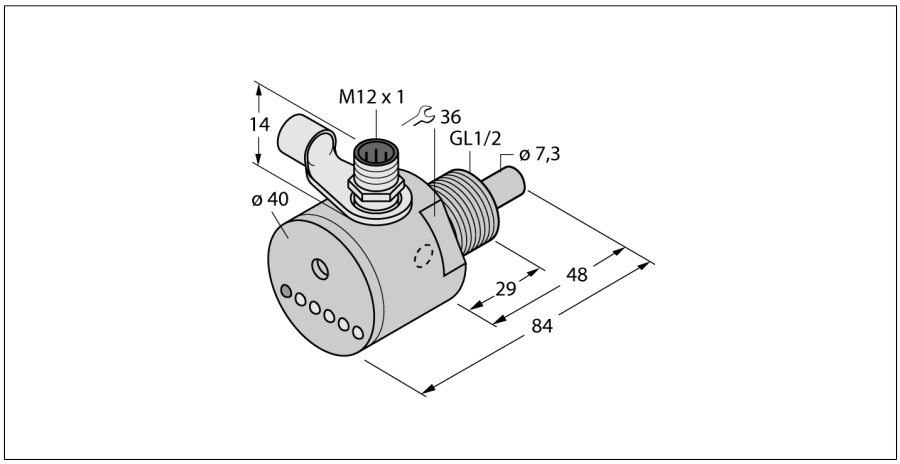

- **Flow sensor for liquid media**
- **Calorimetric principle**
- **Adjustment via potentiometer**
- **LED band**
- **Sensor with earthing option**
- **3-wire DC, 21…26 VDC**
- **NO contact, PNP output**
- **Plug-in device, M12 x 1**

Wiring diagram

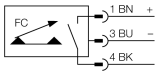

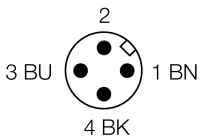

Type code	FCS-GL1/2A4-AP8X-H1141/D023
Ident no.	6870213

Mounting conditions	insertion style sensor
Water Operating Range	1…150cm/s
Oil Operating Range	3…300 cm/s
Stand-by time	typ. 8 s (2…15 s)
Switch-on time	typ. 2 s (1…15 s)
Switch-off time	typ. 2 s (1…15 s)
Temperature jump, response time	max. 12 s
Temperature gradient	≤ 250 K/min
Medium temperature	-20…80 °C

Operating voltage	21…26VDC
Current consumption	≥ 70 mA
Output function	PNP, NO contact
Rated operational current	0.4 A
Voltage drop at I_e	≤ 1.5 V
Short-circuit protection	yes
Reverse polarity protection	yes

Housing material	stainless steel, V4A (1.4571)
Sensor material	stainless steel, AISI 316Ti
Max. tightening torque housing nut	100 Nm
Connection	male, M12 x 1
Pressure resistance	100 bar
Process connection	G ½″ long

Switching state	LED chain green / yellow / red
Flow state display	LED chain
Indication: Drop below setpoint	LED red
Indication: Setpoint reached	LED yellow
Indication: Setpoint exceeded	4 x LEDs green

Functional principle

Our insertion - flow sensors operate on the principle of thermodynamics. The measuring probe is heated by several °C as against the flow medium. When fluid moves along the probe, the heat generated in the probe is dissipated. The resulting temperature is measured and compared to the medium temperature. The flow status of every medium can be derived from the evaluated temperature difference. Thus TURCK's wear-free flow sensors reliably monitor the flow of gaseous and liquid media.

Edition • 2015-07-28T06:02:12+02:00