Flow monitoring
Immersion sensor with integrated processor
FCS-M18-LIX/D071

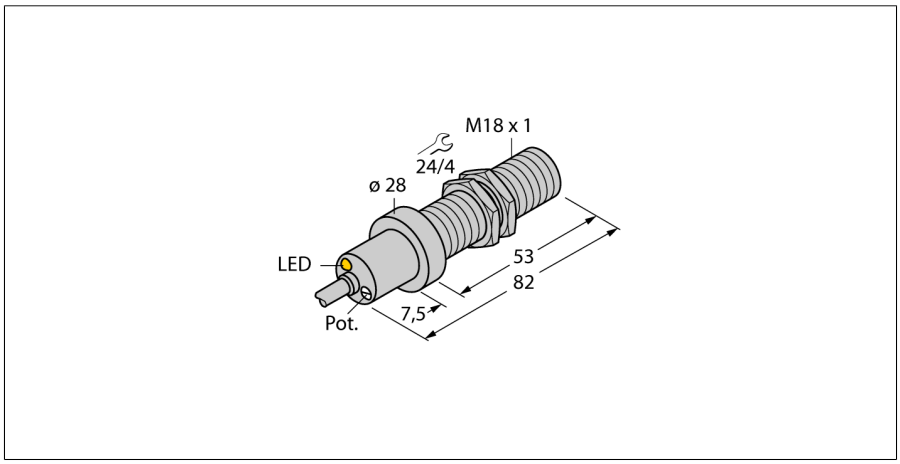

Type code	FCS-M18-LIX/D071
Ident no.	6870713
Mounting conditions	insertion style sensor
Setting time	typ. 2 s (1…20 s)
Temperature jump, response time	max. 12 s
Temperature gradient	≤ 200 K/min
Medium temperature	-20…70 °C
Operating voltage	21…26VDC
Output function	analog output
Short-circuit protection	yes
Reverse polarity protection	yes
Current output	4…20mA
Load	≤ 500 Ω
IP Rating	IP67
Housing material	metal, CuZn
Sensor material	brass, brass, nickel-plated
Connection	cable
Cable length	0.3 m
Cable cross section	3 x 0.75 mm²
Pressure resistance	3 bar
Process connection	M18 x 1
Power on display	LED, green

- **Flow sensor for gaseous media**
- **Calorimetric principle**
- **Adjustment via potentiometer**
- **Operating range acc. to reference sensor**
- **LED "power on" indication**
- **Chrome-plated brass sensor**
- **Metal dead stop firmly bonded to the last threads**
- **Integral 30 cm cable with wire sleeves**
- **Coding of the conductors with numbers: 1) BN, 3) BU 4) BK**
- **3-wire DC, 21…26 VDC**
- **4…20 mA analog output**
- **Cable device**

Wiring diagram

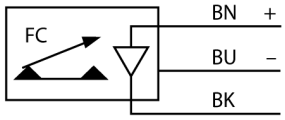

Functional principle

Our insertion - flow sensors operate on the principle of thermodynamics. The measuring probe is heated by several °C as against the flow medium. When fluid moves along the probe, the heat generated in the probe is dissipated. The resulting temperature is measured and compared to the medium temperature. The flow status of every medium can be derived from the evaluated temperature difference. Thus TURCK's wear-free flow sensors reliably monitor the flow of gaseous and liquid media.

Edition • 2015-07-28T06:07:07+02:00

Hans Turck GmbH & Co.KG ● D-45472 Mülheim an der Ruhr ● Witzlebenstraße 7 ● Tel. 0208 4952-0 ● Fax 0208 4952-264 ● more@turck.com ● www.turck.com